INSTALLATION AND MAINTENANCE MANUAL

MAXXflo EVO

High efficiency condensing stainless steel storage water heater

CWH 30/201, CWH30/301, CWH60/201, CWH60/301

Please read and understand these instructions before commencing installation and leave this manual with the customer for future reference.

Andrews. Built to perform.

ANDREWS
WATER HEATERS

M8670

Blank Page

Table of Contents

Ref	Subject	Page
1.0	**General & Safety Information**	
1.1	Description of heater	4
1.2	For whom is this manual intended?	4
1.3	Symbols used in this guide	5
2.0	**Safety**	
2.1	Usage and competency	6
2.2	General safety	6
2.3	Regulations and standards	7
2.4	CE Marking	8
3.0	**Technical Data**	
3.1	Technical data	9
3.2	Product Fiche	10
3.3	Performance data	11
3.4	General dimensions and connections	12
3.5	System Schematic examples	14
3.6	Wiring diagrams	19
4.0	**Installation**	
4.1	Locating the heater	20
4.2	Removing the door and inner cover	20
4.3	Cold water supply	22
4.4	Unvented design	23
4.5	Secondary return design (DHW circulation pump)	24
4.6	Condensate disposal	25
4.7	Flue systems and ventilation	26
4.8	Maximum flue lengths	35
4.9	Gas connections	36
4.10	Electrical & communication connections	37
5.0	**Commissioning**	
5.1	Filling and removal of air	39
5.2	Commissioning the heat engine	40
5.3	Conversion to LPG	43
5.4	Frost protection and Legionella	45
5.5	Final checks and user handover	47
5.6	Fault finding	48
6.0	**Maintenance**	
6.1	Routine Inspection intervals & requirements	49
6.2	Removing and changing components	56
6.3	Component parts illustrations	64
6.4	Recommended spares requirements	72
6.5	Error codes	73

1.0 GENERAL & SAFETY INFORMATION

1.1 DESCRIPTION OF HEATER

This Andrews Water Heaters MAXXflo EVO is a gas fired, low NOx, direct fired water heater, with an integrated stainless steel tank.

Fully automatic electronic controls are integrated into the heater, with a wide range of control and sensor options available. The controls also provides voltage free outputs for Enable, Burner On and fault indication. Full BMS integration is available through the use of Modbus and optional protocol devices.

Access to the controls of the heater via the Internet and/or mobile phone app, is possible through an optional web server device available from Andrews Water Heaters.

The water heater consists of a stainless steel combustion chamber, premix burner, modulating fan, gas valve, ignition and flame detection electrodes, water pressure sensor and a NTC flue sensor for safety supervision.

The water heater is equipped with NTC sensors for precise temperature control on flow and return manifolds. Fully premixed, radiating, modulating burner, integrated with gas valve to deliver precise gas/air mixture throughout the full modulation range.

Common combustion air intake manifold, takes air from boiler room (type B23 flue) or directly from outside via a combined flue system (C13, C33, C53 & C63).

The safety and operation functions of the water heater is managed by micro processor controlled circuit board, modulating the water heater according to the demand. Control is performed using comparison parameters between the requested temperature and flow temperatures from temperature sensors.

Control Logic:

When a demand is started (DHW tank sensor is < DHW tank setpoint - Hysteresis), the water heater is quickly ignited. The controls calculate the charging setpoint (factory standard is DHW tank setpoint + 2^{O}C) and the heat engine then modulate the pump and burner so that the charging temperature into the tank does not exceed the charging setpoint by more than 1^{O}C.

When the DHW tank setpoint has been reached, the controls will switch off the water heater and the controls will remain in standby until demand for heat is re-established.

When DHW tank temperature (B3 sensor) < DHW setpoint - DHW Hysteresis, demand will be restarted and operation as described above, will begin again.

1.2 FOR WHOM IS THIS MANUAL INTENDED?

This manual is intended for the heating specialist who installs commercial/industrial heating plant and equipment.

1.3 SYMBOLS USED IN THIS GUIDE

DANGER!

Indicates serious danger to personal safety and life

DANGER of electric shock!

Indicates serious danger from electricity to personal safety and life

WARNING!

Very hot water can cause severe burns and in extreme cases death

CAUTION!

Indicates a potentially dangerous situation for the heater and the environment

INFORMATION

Suggestions to assist the user in implementing instructions in this guide

ADDITIONAL READING

Reference to additional information in other documents

2.0 SAFETY
2.1 USAGE AND COMPETENCY

2.1.1 IMPROPER USE

This Andrews Water Heaters product has been designed and manufactured to comply with current European standards of safety. However, following an improper use, dangers could arise concerning the safety and life of the user or of other people, or damage could be caused to the heater or other objects. This heater is designed to be used in a domestic hot water supply and storage system. Any other use of this heater will be considered improper. Andrews Water Heaters declines any responsibility for any damage or injuries caused by an improper use. In order to use the heater according to its designed scope, it is essential to carefully follow the instructions given in this guide.

2.1.2 USER COMPETENCY

This heater is not intended for use by persons with reduced physical, sensory or mental capabilities, or lack of experience and knowledge, unless they are given supervision or Instruction concerning the use of it by a person responsible for their safety. Children under the age of 12 years should not be permitted to use the heater.

2.1.3 ENGINEER COMPETENCY

The installation, adjustment & servicing of this heater must be carried out by a competent person and installed in accordance with current standards and regulations. Failure to correctly install or maintain this heater could cause injury to persons or damage to property. The manufacturer shall not be held liable for any such injury and/or damage.

2.2 GENERAL SAFETY

2.2.1 SMELL OF GAS

If you smell gas - follow these safety instructions:
- **Do NOT** turn off or on any electrical switches (including light switches)
- **Do NOT** smoke
- **Do NOT** use the telephone
- **DO** evacuate persons away from the source of the gas smell
- **DO** close the main gas shutoff valve
- **DO** open all the windows and doors where the gas leakage has occurred
- **DO** inform the gas authority or a competent specialist as soon as possible

2.2.2 FLAMMABLE SUBSTANCES

Do not store or use explosive or easily inflammable material (such as petrol, paint or paper) in the same room where this heater has been installed.

2.2.3 VERY HOT WATER

Water temperature over 50°C can cause burns and in severe cases injury or death. Children, the elderly and the physically or mentally disabled are most at risk from scald injury. Feel water before bathing and showering. Temperature limiting devices such as mixing valves should be installed whenever possible to ensure safe temperatures at outlets

2.2.4 HEATER INSTALLATION AND MAINTENANCE

This heater has been designed for use with G20 (natural gas) and G31 (liquefied propane gas) and is manufactured to give an efficient, safe and long service life. To ensure continued trouble-free operation of this heater at maximum efficiency, it is essential that correct installation, commissioning, operation and service procedures are carried out strictly in accordance with the instructions given in this manual.

Only original parts and accessories from the manufacturer may be used on this heater. Using non-approved parts may compromise the safety of the heater and invalidate any warranty.

In the event of failure and/or suspected faulty functioning of the heater. Switch off the heater and contact a suitable qualified technician. Do not attempt to make any repairs yourself, unless you are suitably qualified and competent to do so.

2.3 REGULATIONS AND STANDARDS

This heater must be installed in accordance with relevant Standard Specifications, Codes of Practice and current Building Regulations, together with any special regional requirements of the Local Authorities, Gas undertaking and Insurance Regulations for the Electrical Equipment of Buildings. The installation of this heater must be in accordance with the relevant requirements of:

- Health and safety at work act 1974
- Building regulations 2010
- Electricity at work regulations 1989
- Management of health and safety at work regulations 1998
- Manual handling regulations 1992
- Model water byelaws 1986
- BS 7671 - Requirements for electrical installations, IEE wiring, regulations
- BS 6644 - Specification for the installation of Gas fired hot water boilers for rated inputs between 70kW (net) and 1.8 MW
- BS 7074-2 - Applications selection and Installation of expansion vessels and ancillary equipment for sealed water systems.
- BS 6880:1 Code of practice for low temperature hot water heating systems of output greater than 45kW.
- BS 6880:2 Code of practice for low temperature hot water heating systems of output greater than 45kW.
- BS 6880:3 Code of practice for low temperature hot water heating systems of output greater than 45kW.
- CP 342:2 Code of practice for centralised hot water supply. Buildings other than individual dwellings.
- IM/11 - Flues for commercial and Industrial Gas Fired Boilers and Air Heaters
- IGE/UP/1 - Soundness Testing and Purging Procedure for Non Domestic Installations
- IGE/UP/2 - Gas Installation Pipe work, Boosters and Compressors for Industrial and Commercial Premises
- IGE/UP/10 - Installation of flued gas appliances in industrial and commercial premises.
- IGE/UP/16 - Design for Natural Gas installations on industrial and commercial premises with respect to hazardous area classification and preparation of risk assessments

These manufacturer's notes must not be taken in any way as over-riding statutory obligations.

2.4 CE MARKING

There is one data plate located on the heater. This is mounted on the outside of the heater (left hand side)

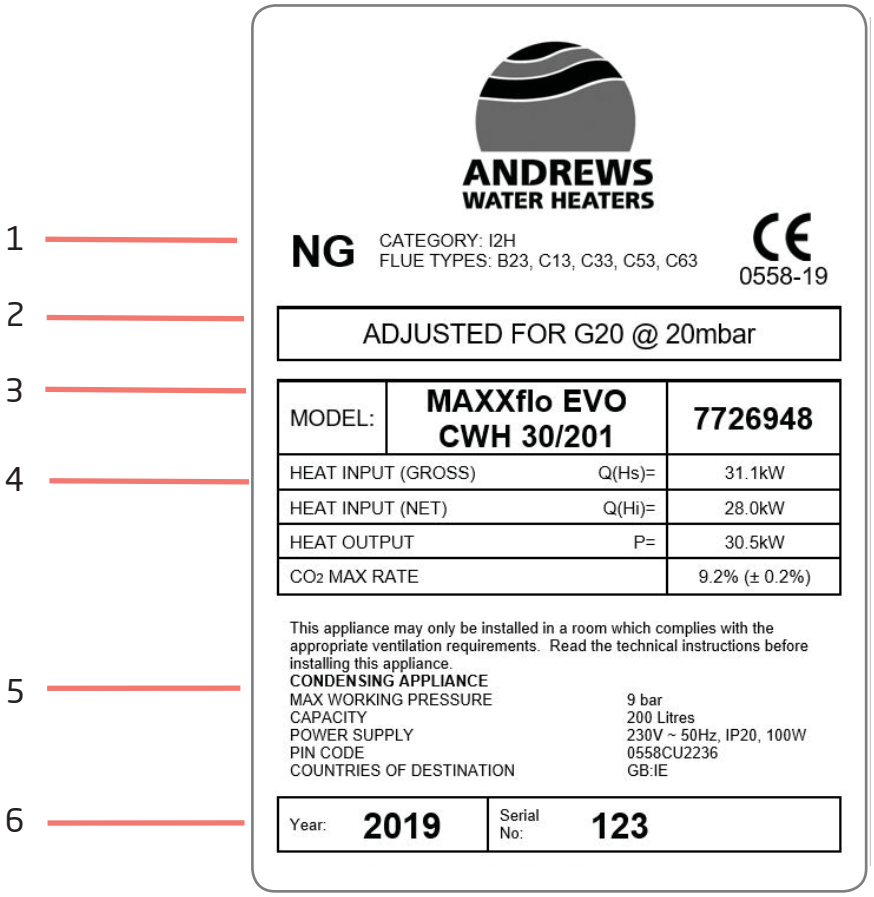

KEY

1 Type approval designation
2 Gas type and pressure
3 Model Name
4 Heat, gas flow & CO_2 data
5 Technical data
6 Serial number and year

The CE marking documents of this heater confirms compliance with the essential requirements of the following directives or Regulations:

- Gas Appliance (GAR) Regulation 2016/426
- Ecodesign Requirements for Energy Related Products (ERP) 2009/125/EC
- Electromagnetic Compatibility (EMC) Directive 2014/30/EU
- Low Voltage (LVD) Directive 2014/35/EU
- Boiler Efficiency (BED) Directive 92/42/EEC

This manual is an integral and indispensable part of the heater and it is suggested that this manual is kept in a safe place for future reference.

3.0 TECHNICAL DATA

3.1 TECHNICAL DATA SHEET

MAXXflo EVO

Product name			**CWH 30/201**	**CWH 30/301**	**CWH 60/201**	**CWH 60/301**
Daily electricity consumption	Q_{elec}	kWh	0.141	0.144	0.143	0.171
Declared load profile			XL	XXL	XL	XXL
Sound power level, indoors	L_{WA}	dB	53	53	63	63
Daily fuel consumption	Q_{fuel}	kWh	20.016	24.758	21.174	24.869
Emissions of nitrogen oxides	NO_X	mg/kWh	36	39	39	39
Weekly fuel consumption with smart controls	$Q_{fuel, week, smart}$	kWh	-	-	-	-
Weekly electricity consumption with smart controls	$Q_{elec, week, smart}$	kWh	-	-	-	-
Weekly fuel consumption without smart controls	$Q_{fuel, week}$	kWh	-	-	-	-
Weekly electricity consumption without smart controls	$Q_{elec, week}$	kWh	-	-	-	-
Storage volume	V	l	200	300	200	300
Mixed water at 40 °C	$V40$	l	∞	880	∞	∞
Harmonised standards applied	EN: 13203-2					
Specific precautions that shall be taken when the water heater is assembled, installed or maintained:	Before any assembly, installation or maintenance the installation and operation manual has to be read attentively and to be followed					

ANDREWS
WATER HEATERS

3.2 PRODUCT FICHE

MAXXflo EVO

Product name		CWH 30/201	CWH 30/301	CWH 60/201	CWH 60/301
Declared load profile		XL	XXL	XL	XXL
Water heating energy efficiency class		A	A	A	A
Water heating energy efficiency	%	95	98	91	97
Annual energy consumption	*kWh(1)* *GJ* (2)	12 16	32 20	10 16	38 20
Other load profiles for which the water heater is suitable to use and corresponding water heating efficiency and annual electricity consumption(3)					
Thermostat temperature setting	°C	60	60	60	60
Sound power level L_{WA} indoors	*dB*	53	53	63	63
Ability to off-peak hours functioning(3)		Yes	Yes	Yes	Yes
Enabled smart control settings(4)		-	-	-	-

(1) Electricity
(2) Fuel
(3) If applicable
(4) If smart control setting value is "1", the water heating energy efficiency and annual electricity / fuel consumption only relate to enabled smart control settings

ANDREWS WATER HEATERS

3.3 PERFORMANCE DATA

PERFORMANCE	Unit	30/201	30/301	60/201	60/301
Q Maximum Heat Input net (gross)	kW	28.0 (31.1)		56.0 (62.2)	
Q Minimum Heat Input net (gross)	kW	6.5 (7.2)		12 (13)	
Output Max (Min)	kW	30.5 (7.1)		61.0 (13)	
V Maximum Gas Consumption G20 / G31	m^3/h	2.95 / 1.15		5.95 / 2.35	
Flue gas temperature max (75°C Antilegionella)	°C	90			
CO_2 at max output G20 / G31	%	9.2 / 10.0		9.1 / 9.5	
CO at max output	ppm	40		100	
NOx emission GCV	mg/kWh	39.1		36.0	
NOx Class	class	6			
Sound level (EN15036-1 Average @ 1m)	LAeq	53		63	
HOT WATER					
Tank capacity	litres	200	300	200	300
Thermal Standby losses	kWh/day	1.68	2.26	1.68	2.26
Recovery rate through 50°C	l/hr	480		960	
Recovery rate through 56°C	l/hr	429		856	
Approximate Heat up time △T = 50°C	minutes	23	34	12	17
Approximate Heat up time △T = 45°C	minutes	21	31	10	16
PMS Inlet / Operating pressure max (min)	bar	9.0 (0.8)			
In / Out connections	BSP	1 1/2”			
Water return connection	BSP	1”			
ELECTRICAL					
Electrical supply voltage / Hz	V / Hz	220 - 240 / 50			
Fuse rating on mains supply	A	5			
Insulation protection rating	IP	IP20			
Power consumption - standby	W	3.5			
Power consumption - maximum	W	100		145	
FLUE					
Flue connection - single	mm	80			
Flue connection - concentric	mm	80 / 125			
Flue systems permitted	type	B23, C13, C33, C53, C63			
Max flue equivalent length - open (B23)	m	40			
Max flue equivalent length - concentric (C13,C33)	m	18			
Max flue equivalent length - twin (C53)	m	36			
Flue gas volume @ minimum load	kg/h	11.3		21.0	
Flue gas volume @ nominal load	kg/h	48.8		97.6	
Maximum internal flue pressure @ 65°C	Pa	60		80	
Maximum condensation production	l/h	4.0		8.0	
OTHER CONNECTIONS					
Gas	BSP	3/4”			
Condensate	mm	41mm (hunter type)			
Tank drain	mm	22mm			
WEIGHTS & CLEARANCES					
Shipping weight	kg	235	250	240	255
Weight empty	kg	165	180	170	185
Weight full	kg	370	485	380	495
Service clearance - rear	mm	20mm			
Service clearance - right	mm	25mm			
Service clearance - top	mm	300mm			
Service clearance - left	mm	300mm			
Service clearance - front	mm	800mm			

3.4 GENERAL DIMENSIONS & CONNECTIONS (200 LITRE MODELS)

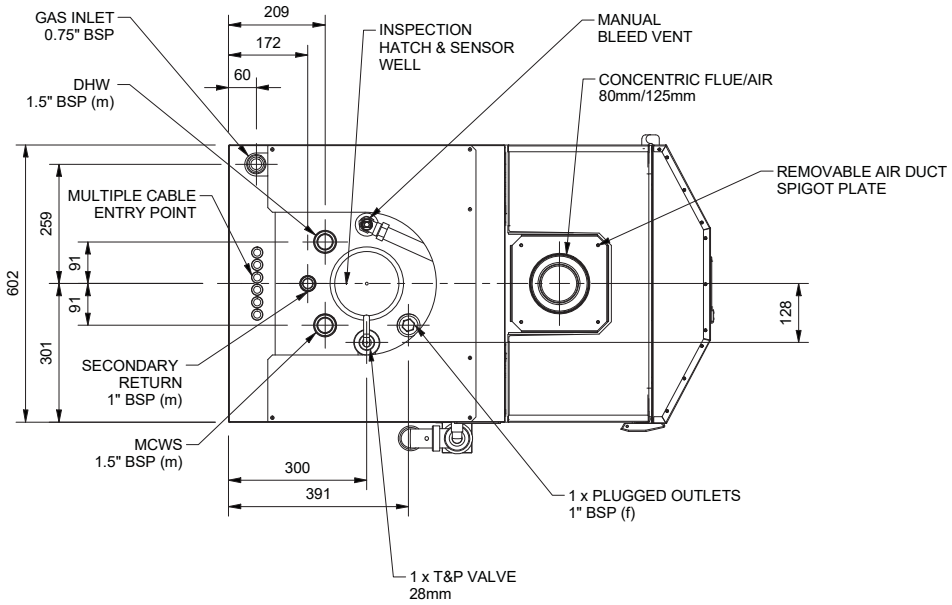

Model Dimensions:

MAXXflo EVO CWH 30/201
MAXXflo EVO CWH 60/201

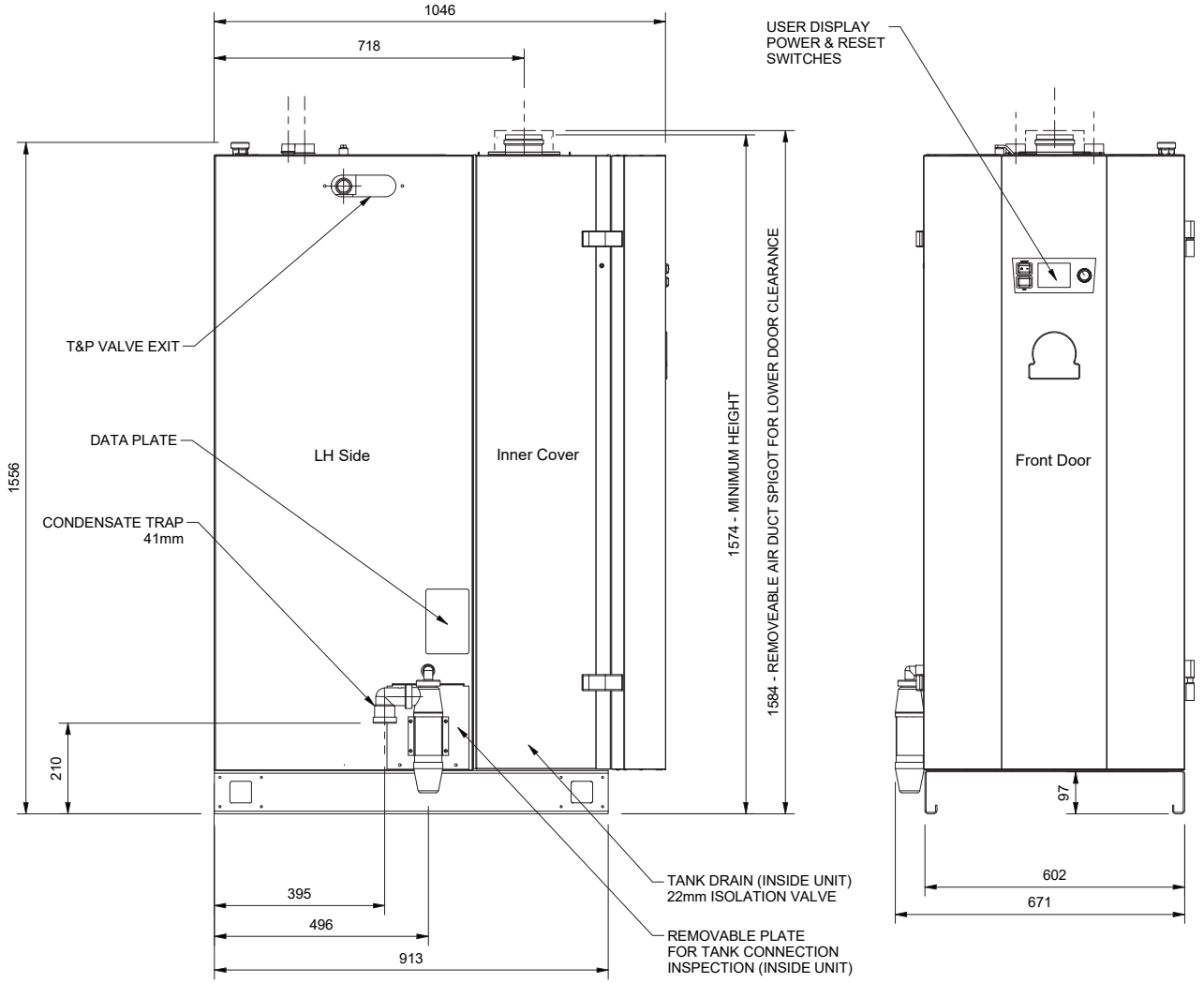

3.4 GENERAL DIMENSIONS & CONNECTIONS (300 LITRE MODELS)

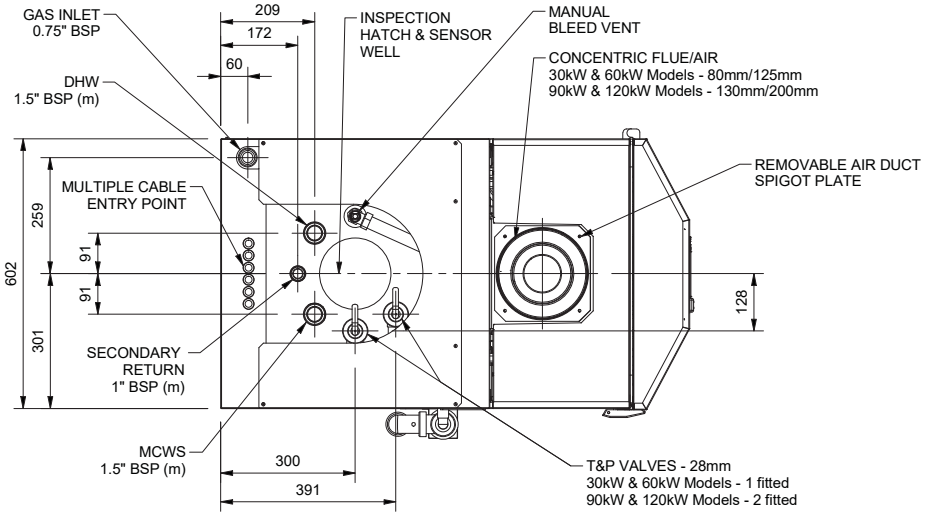

Model Dimensions:

MAXXflo EVO CWH 30/301
MAXXflo EVO CWH 60/301
MAXXflo EVO CWH 90/302
MAXXflo EVO CWH 120/302

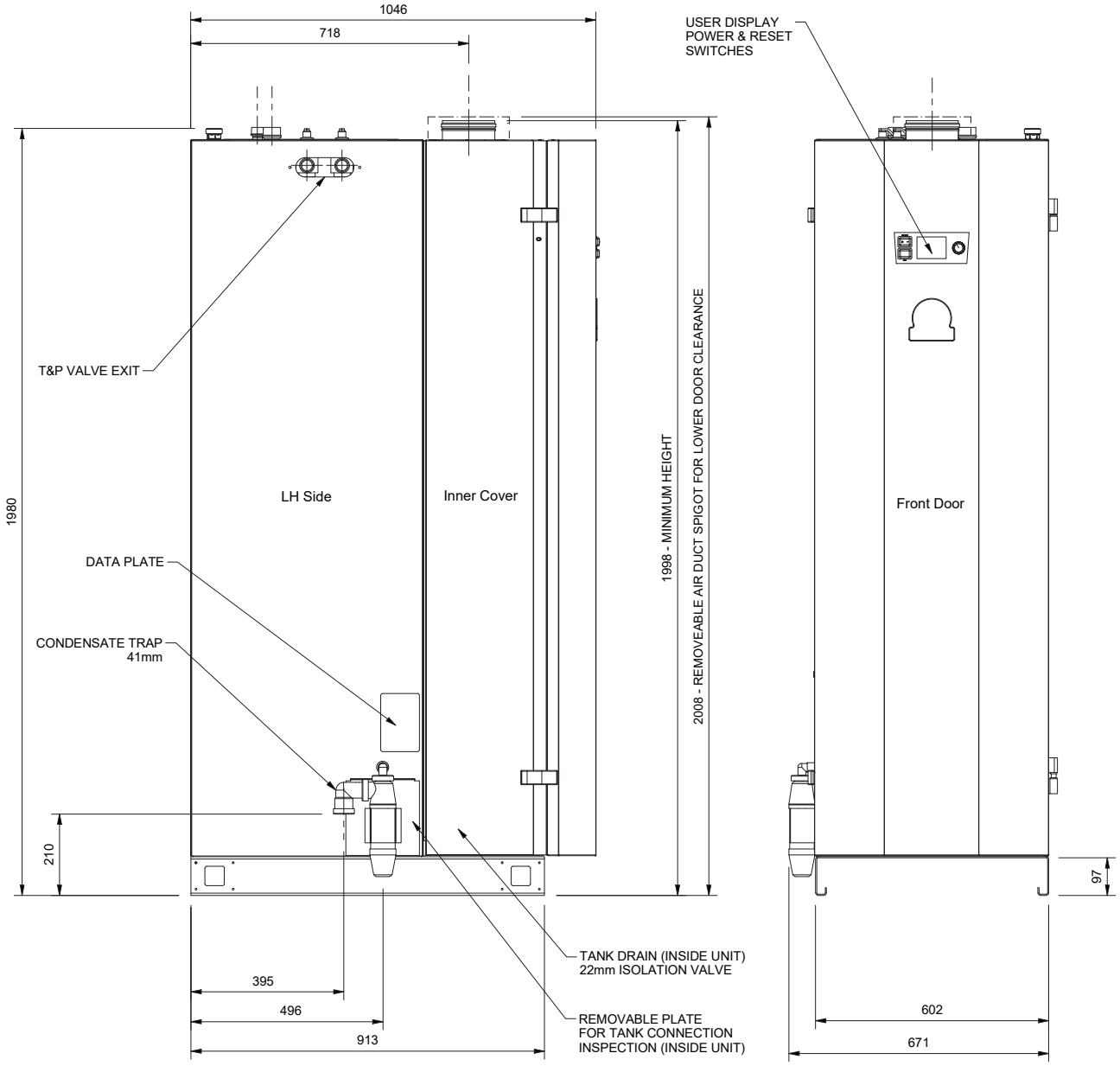

3.5 SYSTEM SCHEMATIC EXAMPLES

EXAMPLE 1: SINGLE MAXXflo EVO (SCHEMATIC)

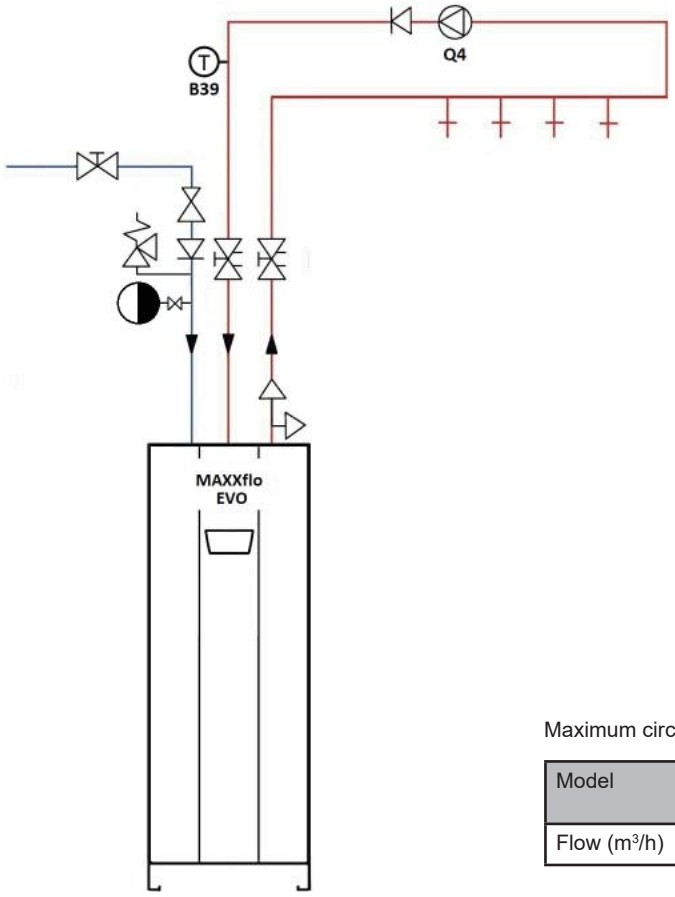

Maximum circulation rate Q4 pomp

Model	MAXXflo EVO 30	MAXXflo EVO 60
Flow (m^3/h)	0.6	1.2

EXAMPLE 2: PARALLEL MAXXflo EVO (SCHEMATIC)

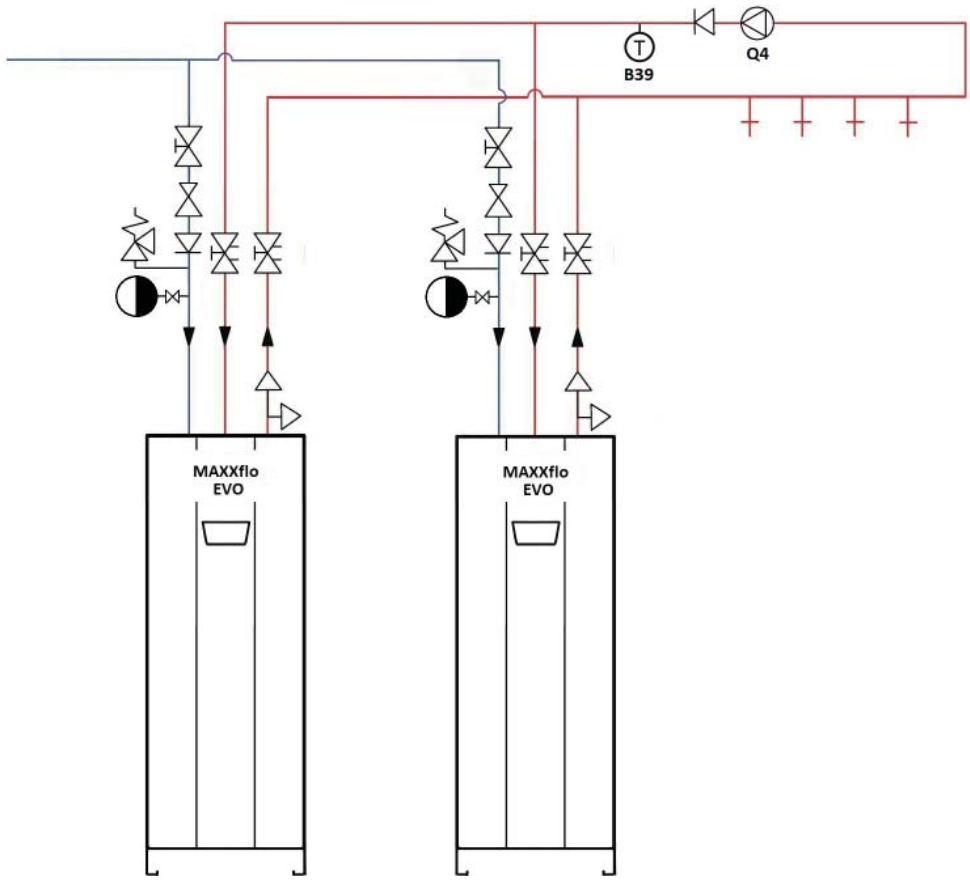

3.5 SYSTEM SCHEMATIC EXAMPLES (CONTINUED)

EXAMPLES 1 & 2: SINGLE AND PARALLEL MAXXflo EVO (SETUP)

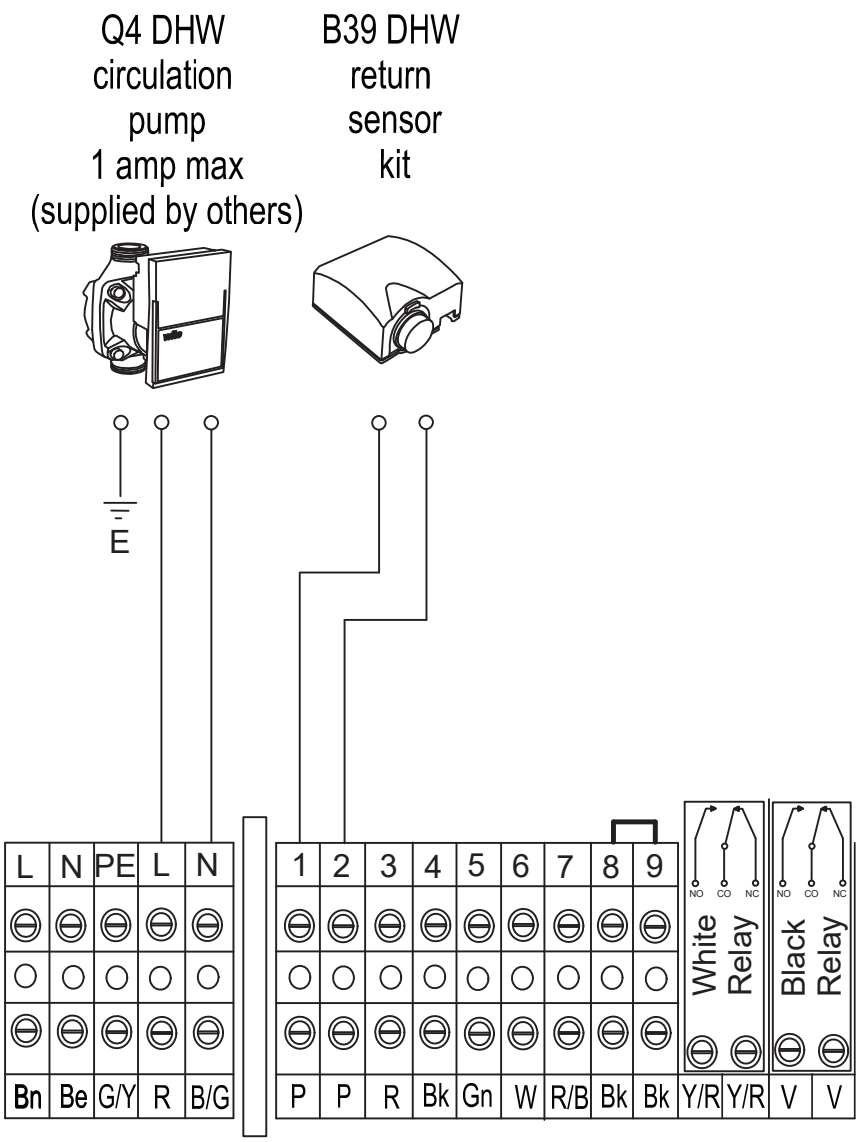

Parameter settings table:

Menu	Parameter	Settings
DHW	1660 Pump release	Set the desired option for activation of the circulation pump, normally activated with time program 4 (DHW) or independent of DHW via time program 5
	1661 Pump repeat cycle	When enabled, the circulation pump will switch on and off during the activation period (10 minutes on and then off repeatedly for 20 minutes). This function is particularly useful when the heat losses on the return pipes are high and the burner works continuously for a long time, with little or no hot water draw off.
	1663 Circulation setpoint	Default set point is 45°C. When the B39 sensor is installed, the controller will check the DHW return temperature during pump activation time. Each time the temperature obtained by the sensor drops below the circulating setpoint, the pump continues to run until the setpoint is reached (minimum duty cycle is 10 minutes). During a legionella cycle, the temperature on the sensor is used to set the dwell time, ensuring that the entire tap water system reaches the legionella setpoint for the total set dwell time. The dwell time counter is not started until the temperature on the sensor reaches the legionella setpoint.

3.5 SYSTEM SCHEMATIC EXAMPLES (CONTINUED)

EXAMPLE 3: MAXXflo EVO & BUFFER SS300-10 (SCHEMATIC)

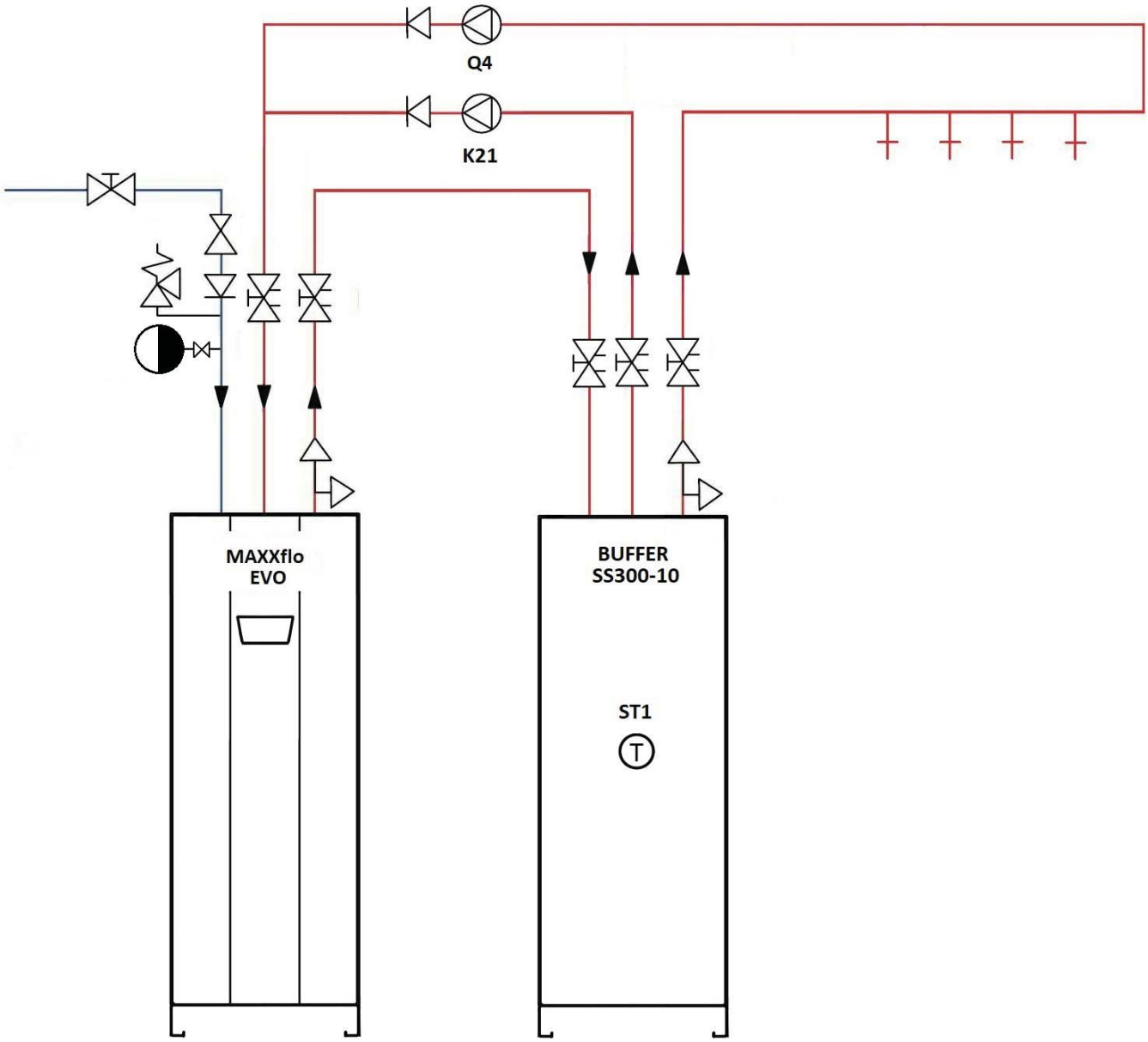

3.5 SYSTEM SCHEMATIC EXAMPLES (CONTINUED)

EXAMPLE 3: MAXXflo EVO & STORAGE TANK (SCHEMATIC)

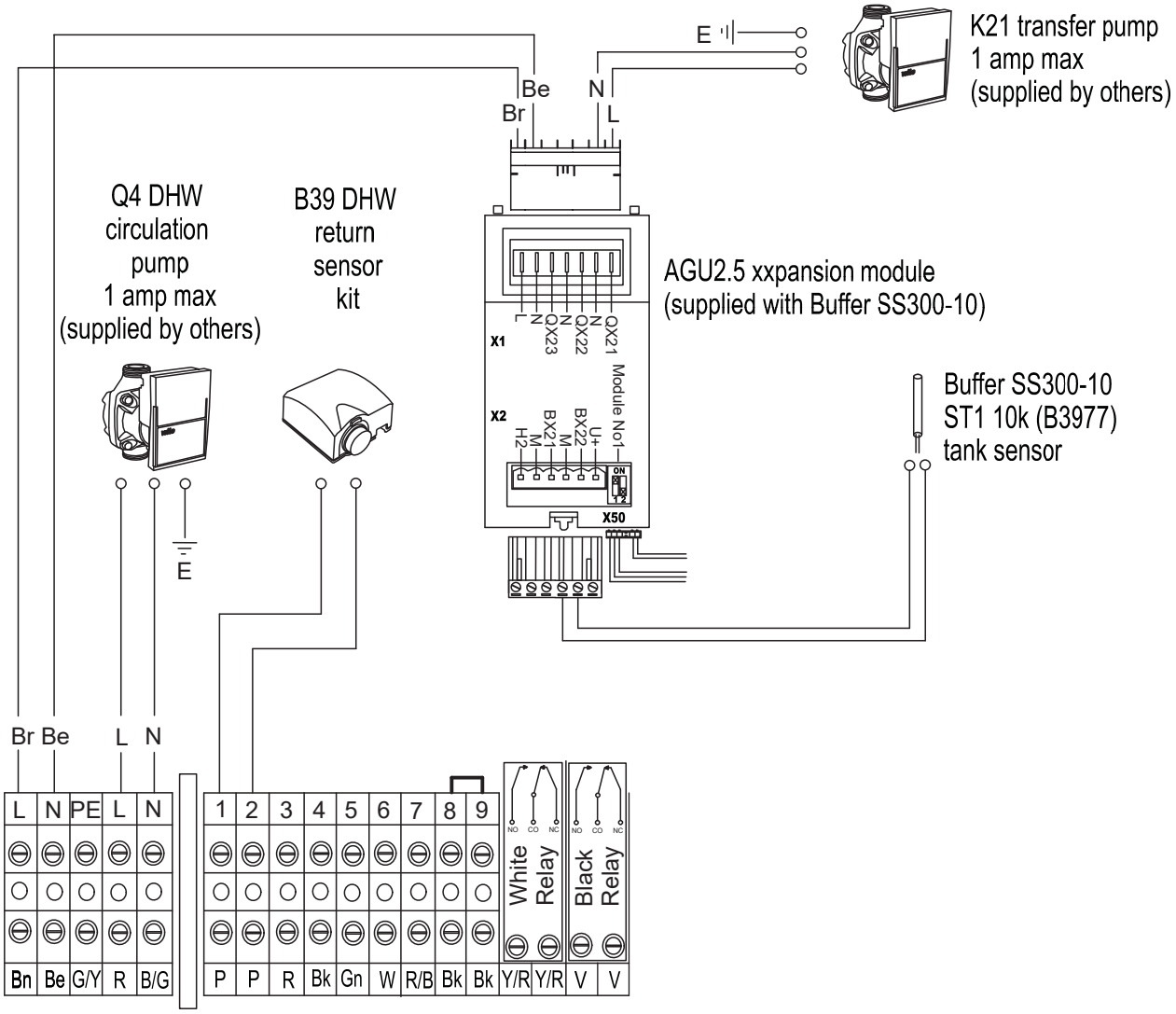

Parameter settings table (in addition to examples 1 & 2):

Menu	Parameter	Settings
Configuration	6020	Set the function of extension module 1 to "Multifunction"
	6030	Set Relay output QX21 module 1 to "dT controller 1 K21"
	6041	Set sensor input BX22, module 1 to "Special temperature sensor 1"
General functions	5570	Factory setting: not used
	5571	Factory setting: "- 1.5°C" - When the temperature of the BUFFER SS300-10 tank is 0.5°C lower than the temperature of the grid tank, the K21 pump is switched off
	5572	Factory setting: "3.0°C" - When the temperature of the BUFFER SS300-10 tank is less than 2.0°C below the temperature of the storage tank, the K21 pump is switched on.
	5573	Factory setting: "DHW sensor B3"
	5574	Factory setting: "Special temperature sensor 1"
	5575	Mode of action: 30 seconds - represents the minimum time that the K21 pump will be activated even if the conditions of parameter 5571 are met.

3.5 SYSTEM SCHEMATIC EXAMPLES (CONTINUED)

EXAMPLE 4 : BMS CONNECTIONS

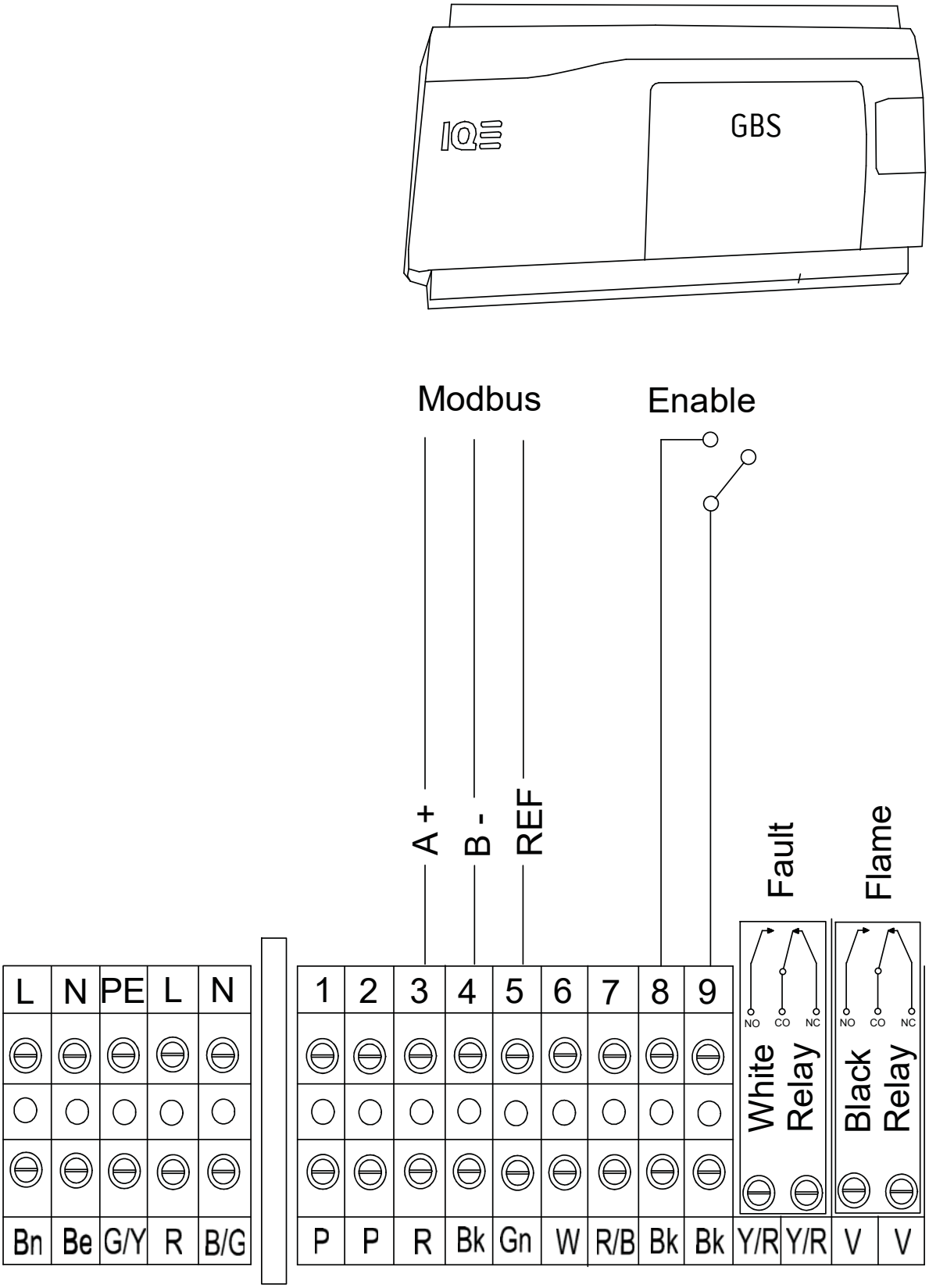

3.6 WIRING DIAGRAMS (MAXXflo EVO 30 & 60 KW MODELS)

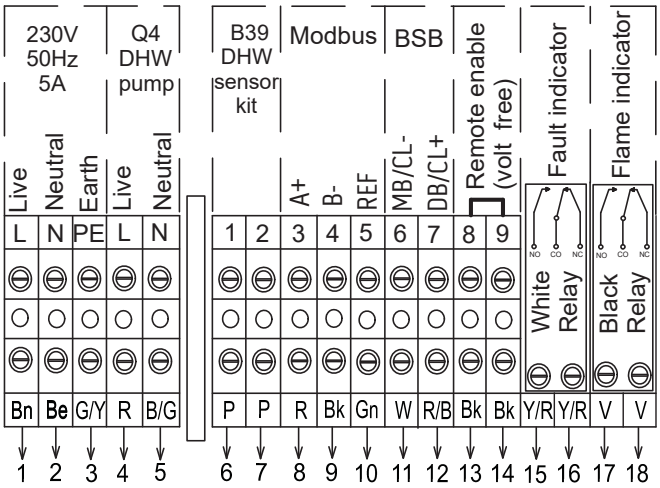

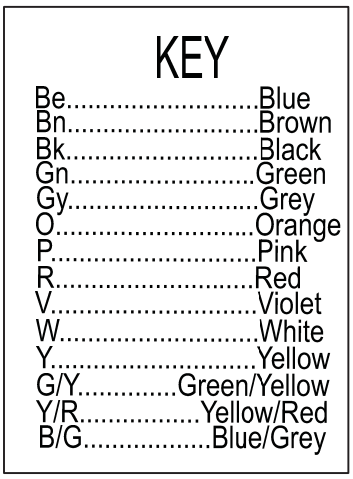

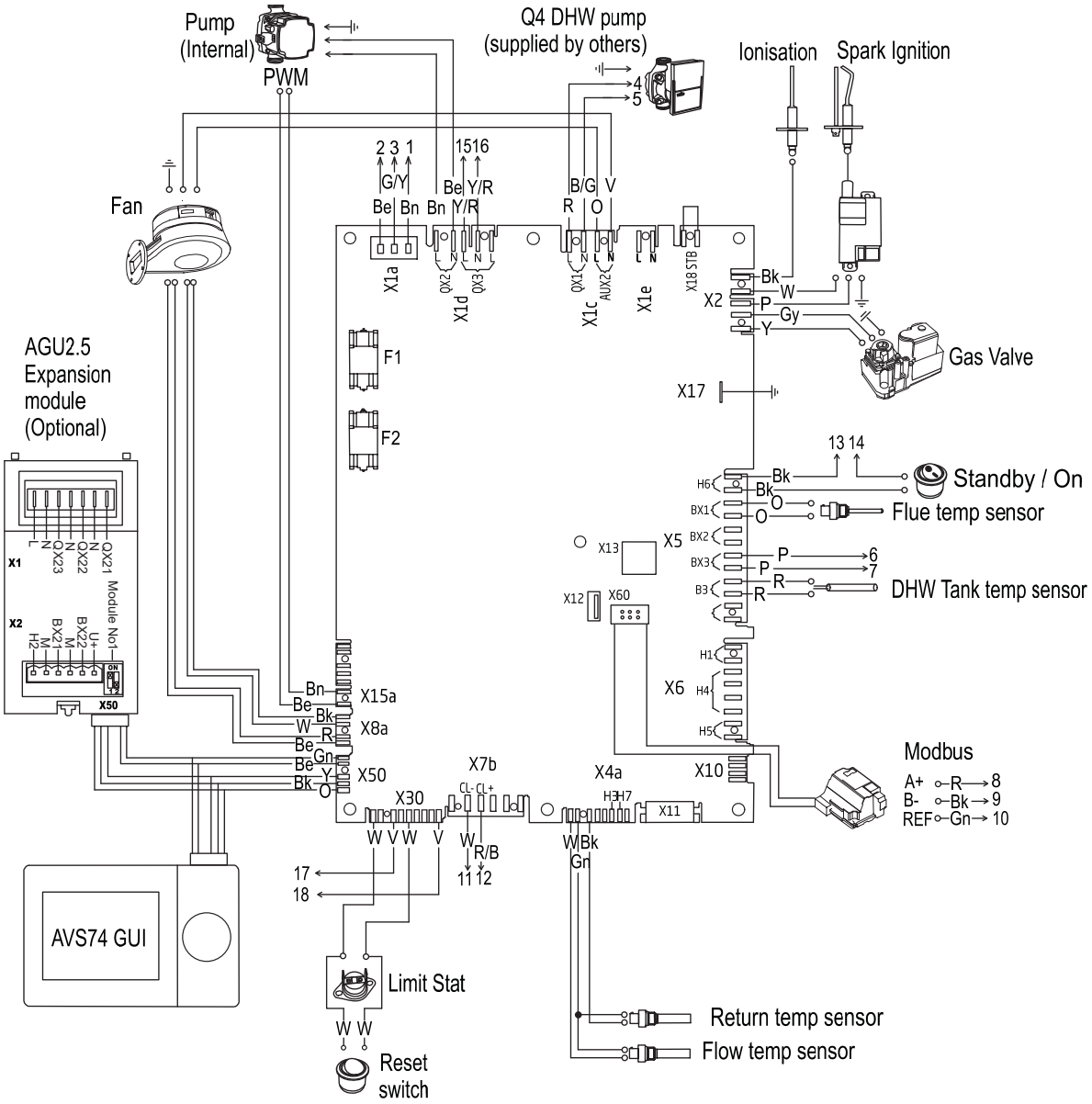

4.0 INSTALLATION

4.1 LOCATING THE HEATER

The location selected for installation of the heater must allow the provision of a satisfactory flue, an adequate air supply (for type B_{23}), a drain and be well illuminated. A purpose built plant room or compartment is strongly recommended.

If a purpose built plant room is not available, measures should be taken to protect the heater from damage and prevent any extraneous matter from being stored on or around the heater. See BS 6644 Clauses 4, 5 and 6 for details.

There must be easy access to the plant room and heater at all times. The heater must be located in an area where leakage from the tank, water connections or the combined temperature and pressure safety valve will not result in damage to the area adjacent to it. When such locations cannot be avoided, a suitable drain tray must be installed under the Heater. The drain tray must be no deeper than 38mm and must be 100mm wider and longer than the heater. It should be piped to an adequate drain using 20mm (0.75in) diameter pipe, angled for proper drainage.

Access must be provided to the front of the heater with adequate clearance for servicing and operation (See 3.3) The floor on which the heater is installed must be flat, level and of sufficient strength to withstand the weight of it when filled with water, and should satisfy the requirements of the Local Authority & Building Regulations.

4.2 REMOVING THE DOOR AND INNER COVER

Ensure that the heater is isolated from the power supply.
Remove the single screw on the left hand side of the door.
Release the two latches by pulling on the back of the latch and lifting outwards.

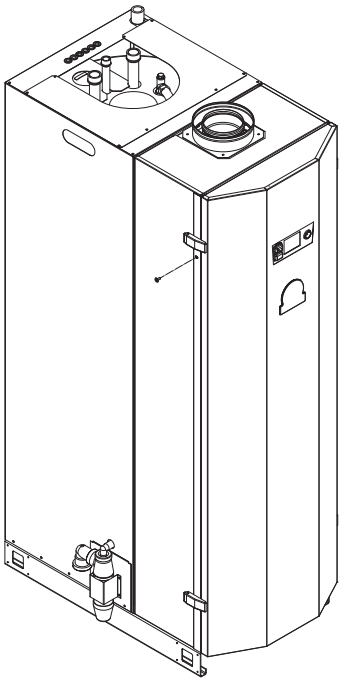

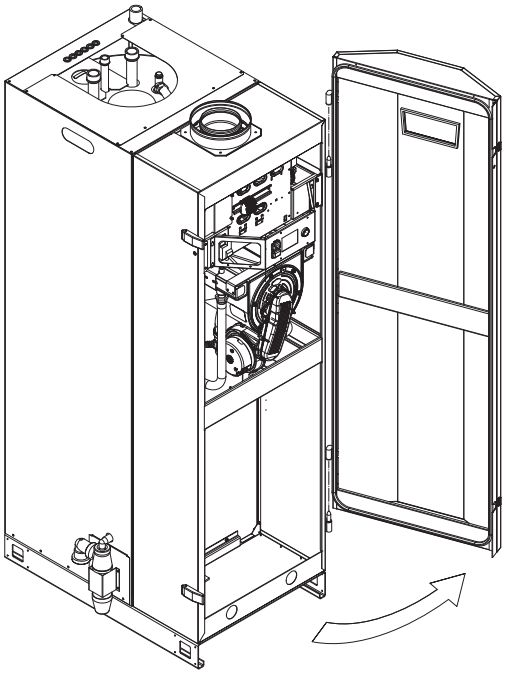

Open the door, and detach the case earthing lead near the upper hinge. Lift the door upwards and off its hinges. Place the door carefully against a wall, ensuring that it cannot fall over.

Remove the four screws either side of the GUI display unit at high level. Loosen the two screws at low level inside the case to remove the case retaining bracket. Pull the inner cover forwards and remove completely.

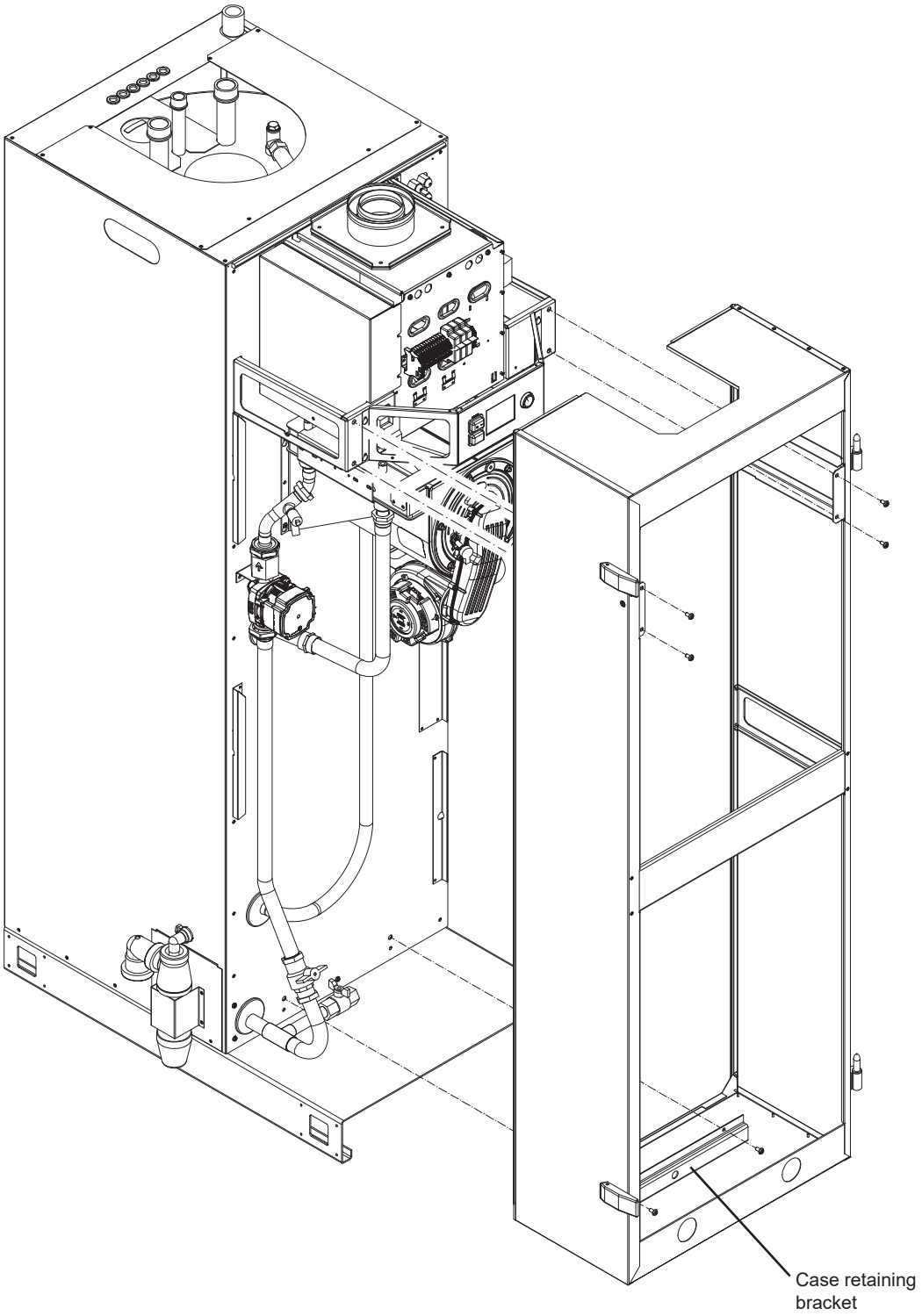

4.3 COLD WATER SUPPLY

4.3.1 CONNECTIONS

The cold water inlet and hot water outlet connection nipples are identified on the top of the heater. Connect the cold water feed and hot water outlet to these nipples with union adaptors for ease of servicing.

Fit a check valve and isolator in the cold water supply before the inlet to the water heater

Do not apply excessive torque to these nipples when making connections. The use of an appropriate drinking water pipe sealing compound is recommended.

4.3.2 SYSTEM

The MAXXflo EVO range of storage water heaters are designed to operate from a mains fed unvented water supply. An unvented system kit is available from Andrews Water Heaters. However, the heater may be connected to an open vent supply provided minimum supply pressures are satisfied.

When connected to a sealed or open vent water system a minimum water pressure of 0.8 bar must be maintained at all times.

This heater is factory fitted with temperature and pressure relief valves. An unvented system must be fitted by an approved installer.

The use of galvanised pipework is not recommended due to issues such as galvanic attack.

4.3.3 WATER QUALITY AND TREATMENT

When installing Andrews Water Heaters in hard water areas we would recommend that a water treatment specialist is consulted

In hard water areas scale formation can occur in all hot water systems and the higher the volume and hotter the water used, the greater the scale build-up can be. Water treatment is usually recommended when the hardness levels measures greater than 150 ppm (7-10 degrees Clark). For this reason, base exchange water treatment is strongly recommended in hard water areas.

4.3.4 DE-STRATIFICATION PUMP

By virtue of its design, an internal DHW tank de-stratification pump is not required.

4.3.5 ANTI-VACUUM VALVE

An Anti-vacuum valve must be fitted to prevent a vacuum forming in installations where there is the potential of the draw off rate exceeding the rate of flow to the inlet; this can occur in properties with multiple outlets below the base of the hot water heater. The valve contains a check cartridge which under normal conditions is held closed by the system pressure. When a vacuum condition exists, the suction will cause the check cartridge to open and air to flow through, equalising the pressure within the hot water heater. The capacity of an anti-vacuum valve should be equal to or greater than the rate of the vacuum formation in the vessel being protected. An Anti-vacuum valve kit (part number 7709364) is available for the MAXXflo EVO that is capable of up to 3 litres/sec @ 500mbar.

4.4 UNVENTED DESIGN

Unvented Systems should only be fitted by an Approved Installer

When using the Heater on an unvented hot water storage system, the Unvented System Kit, part number 7726954, available from the manufacturer **must** be fitted. When used in an unvented system, the Heater will supply hot water at a maximum of 6 bar or at the pressure available at the mains feed if this is lower. During conditions of no-flow, system pressure may rise to a maximum of 8 bar, whilst the burner is operating. When testing the system, it is recommended that a maximum test pressure of 9 bar is used.

For the hot water supply, a 24 litre expansion vessel is suitable for the stored volume of all models and an average pipework system. For systems with larger pipe volumes or additional storage, expansion vessels with greater capacity are available. Assemble the components of the unvented system kit as shown below

When assembling the Pressure Reducing Valve and Double Non-Return Valve, ensure that the flow arrows marked on the components are pointing in the direction of flow, that is towards the heater.

The relief valves fitted to this heater must not be used for any other purpose. No fitting should be installed between the expansion valve and the cylinder. The cold water for services may be drawn from the 22mm compression port up stream of the Pressure Reducing Valve. The water pressure at this point will be similar to that available at the hot water outlet of the water heater. If higher flow rates are required for the cold water services, a suitable tee fitting should be fitted to the pipework, upstream of the Pressure Reducing Valve.

All fittings and materials supplying water to the storage vessel must be suitable for use with drinking water and listed in the current Water Research Centre “Materials and Fittings Directory”. Installation of unvented hot storage water systems must comply with Part G of Schedule 1 of the Building Regulations.

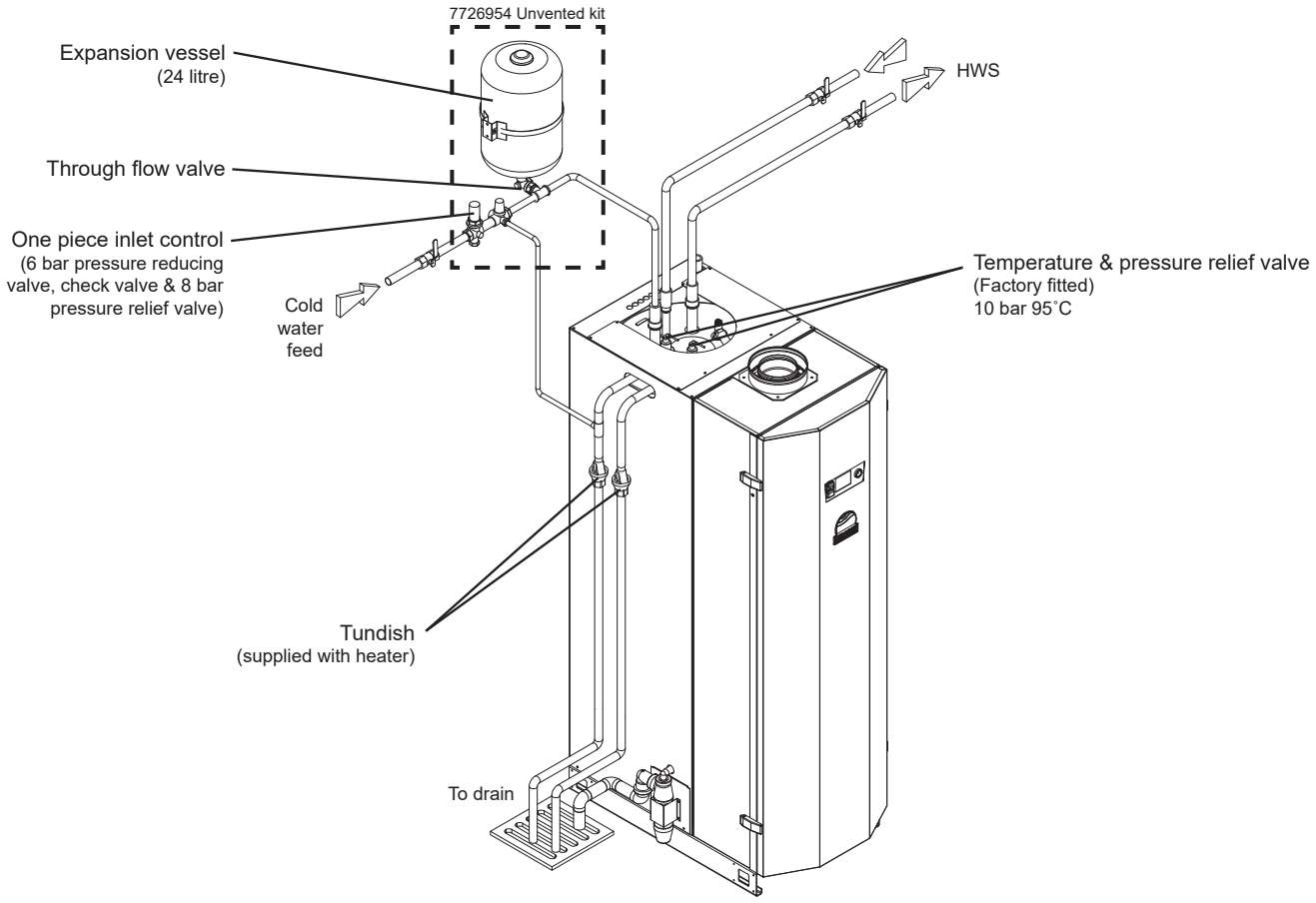

4.5 SECONDARY RETURN DESIGN (DHW CIRCULATION PUMP)

A Secondary Return circuit may be fitted to the 1” nipple at the top of the heater. In all cases, for serviceability, the recirculation pipe must be fitted with a stop valve immediately before the connection point.

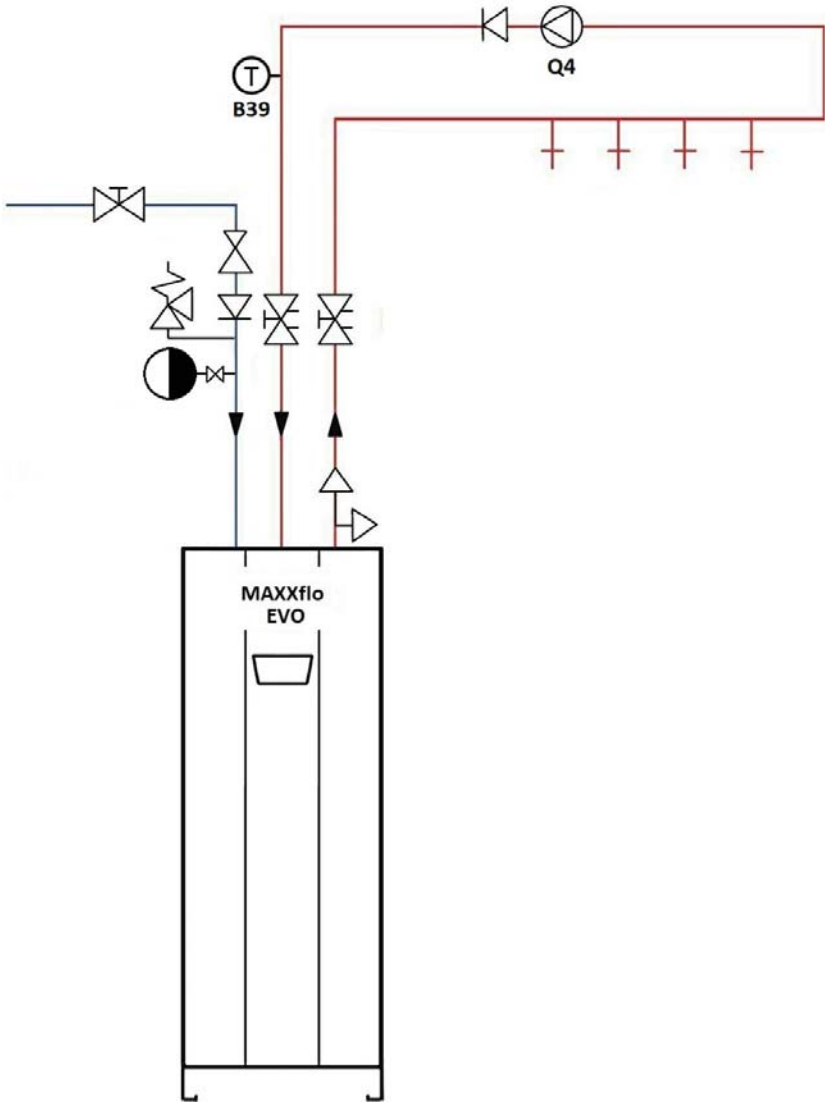

If a secondary return circuit is fitted with a secondary pump, please ensure that the flow-rate does not exceed the heater maximum flow-rate, An excessive flow in the secondary circuit could result in a temperature mixing effect in the heater storage vessel, resulting in a stored water temperature less than set temperature.
See table below:-

Model Type	MAXXflo EVO 30	MAXXflo EVO 60
Maximum flow rate m^3/h	1.8	2.0

It is important that the heat losses from the return system are minimised (through pipe insulation), otherwise the heater may be operating for extended periods of time on minimum load, constantly replacing the heat lost from the return system pipes.

4.6 CONDENSATE DISPOSAL

Condensation is formed in the normal operation of the heater and this must be continuously discharged into a drain. Given the acidity level of condense discharge (pH 3.5 - 4.5) only plastic material can be used for the discharge pipe work. A 60kW heat engine can produce up to 6.0 litres of water per hour, whilst at full load.

Use of 40mm plastic pipe with a drop of at least 30 mm for every metre of pipework is recommended. A trap is supplied which should be connected into a drain via a tundish or air break.

External pipework and that passing through a wall to the outside should be run in a minimum of 40mm diameter. External pipework should be insulated to protect against frost and freezing temperatures.

The condensate trap must be filled with water before operating the heater.

It is important that the condensate flow must be maintained, even in freezing conditions. In the event that the condensate becomes blocked, the heater will shutdown completely, and will not operate again until the flow has been restored.

CONDENSATE DISPOSAL EXAMPLES

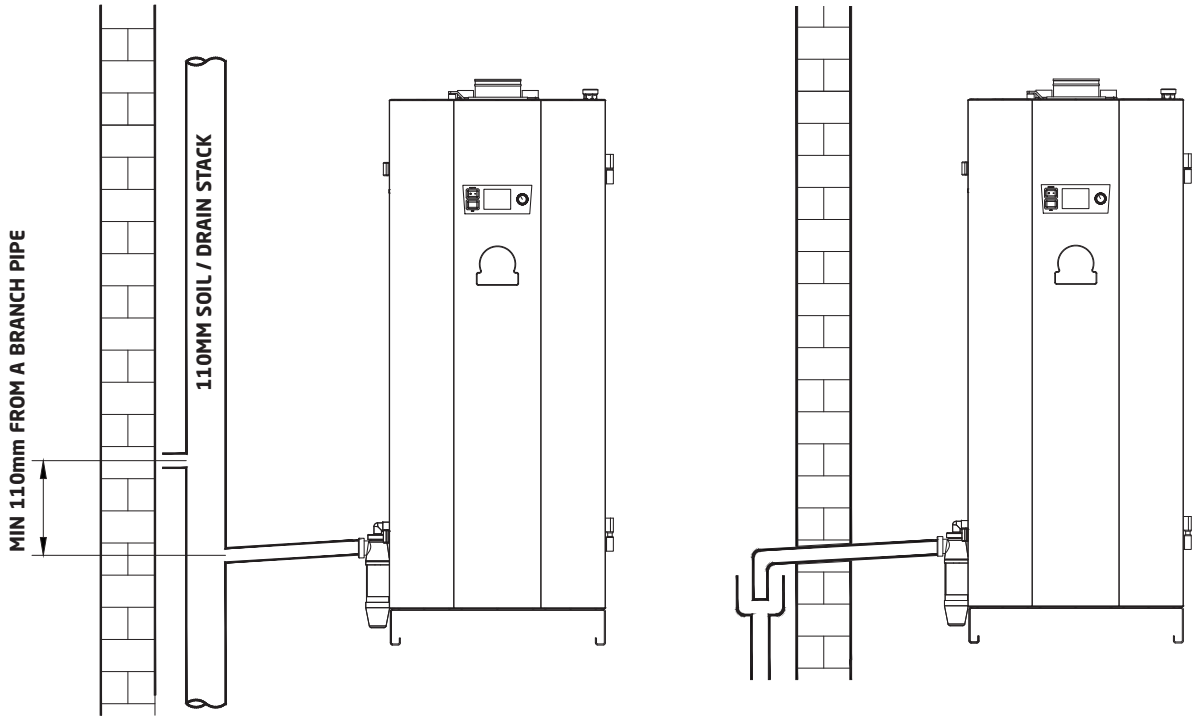

Soil / Vent Stack
There is no requirement for an additional trap or air break when connecting drain pipework to an internal or external soil or vent stack

Gully
There is no requirement for an additional trap if discharging direct into an open gully.

4.7 FLUE SYSTEMS AND VENTILATION

4.7.1. GENERAL REQUIREMENTS

CAUTION:

- The installer is responsible for ensuring that the right type of flue system is used and that the diameter and length are correct. For optimal installation, the accessories supplied by Andrews Water Heaters should ensure that the correct system components are used.

- The coupling and connection methods may vary depending on the manufacturer of the flue system. It is not permitted to combine pipes, coupling and connection methods from different manufacturers. This also applies to roof feed-throughs and common channels.

- If connecting this heater to an older existing flue system, care must be taken to ensure that this system is of the correct size and specification. If the flue system is aluminium, a condensate trap must be fitted in the flue before it connects to the heater.

- This water heater may not be used in areas where chemical substances are stored or used. Some propellants, bleaching and cleaning agents disperse explosive vapours and / or cause accelerated corrosion. Be aware that this water heater may be vulnerable to accelerated corrosion from salty air e.g. Coastal installations

- Refer to the following standards and guidance notes before installing the flue system :

  BS5440 : Flues and ventilation for gas appliances of rated input not exceeding 70kW (net)

  IGEM UP 10 : Installation of flued gas appliances in industrial and commercial premises

  Building Regulations Part J Section 3 : Additional provisions for gas burning appliances with a rated input up to 70kW (net)

4.7.2 SUITABLE FLUE MATERIAL

When using a flue system that has not been supplied by Andrews Water Heaters, make sure that they are certified for the type and use. Check the text string printed on the flue system to ensure the correct materials are selected. See the example below for guidance:

Example text

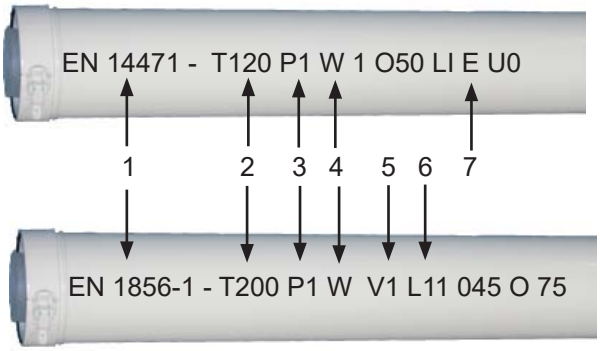

1. This material is CE approved to this standard. EN 14471 for plastic flue and EN 1856-1 for metal flue
2. Temperature rating: Class cannot be lower than T120, but can be higher
3. Pressure rating: P & H ratings are allowed, N rating is not allowed
4. Condensate resistance: Must be W (wet) rated. D (dry) rating is not allowed
5. Corrosion resistance: Must be V1 (gas combustion products) rated. V2 & V3 are not allowed
6. Material: Must be L11 minimum (Aluminium) but can be higher
7. Fire resistance class: Classed A through to E are allowed. Class F is not allowed

4.7.3 GENERAL VENTILATION REQUIREMENTS (TYPE B_{23} CLASSIFICATION)

*Flue type B_{23} - Is an open flue appliance where air is drawn from the room or compartment in which the heater is installed and therefore the room or compartment **must** be ventilated to outside air. Only in exceptional circumstances can ventilation air be taken from inside (see IGEM/UP/10 section 7 for details)*

Adequate ventilation shall be provided to permit the safe operation of any appliance installed within the room or space, including other fuel-fired appliances which may be affected by the

Consideration shall be given to the purpose of the internal space from which ventilation is provided. The internal space should not be part of a dwelling

The ventilation system (including mechanical ventilation) shall be designed such as not to cause the installation space to be under suction to the extent that downdraft in the chimney system could lead to a reverse flow of combustion products into the room or appliance.

The temperature within a room, enclosure or balanced compartment, assuming ambient air conditions of 15°C shall not exceed the following temperatures:

High level (100mm below ceiling level)	40°C
Mid level (1500mm from floor level)	32°C
Low level (100mm above floor level)	25°C

4.7.4 OPEN FLUE APPLIANCE IN A ROOM OR SPACE

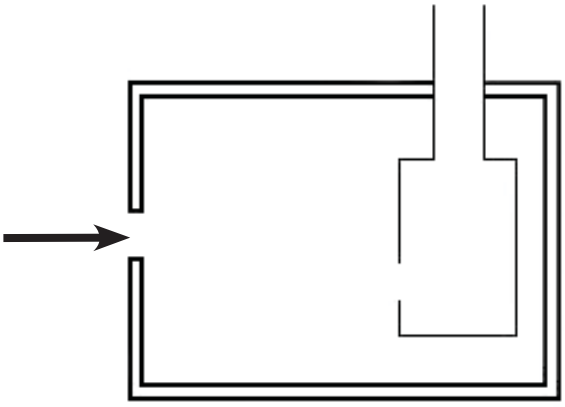

Installations in a room or space with ventilation direct to outside air require the following minimum free area of permanently open vent :

Heater Model	Minimum vent free area
MAXXflo EVO 30	140 cm^2
MAXXflo EVO 60	280 cm^2

4.7.5 OPEN FLUE APPLIANCE IN A COMPARTMENT VENTILATED VIA AN ADJOINING SPACE

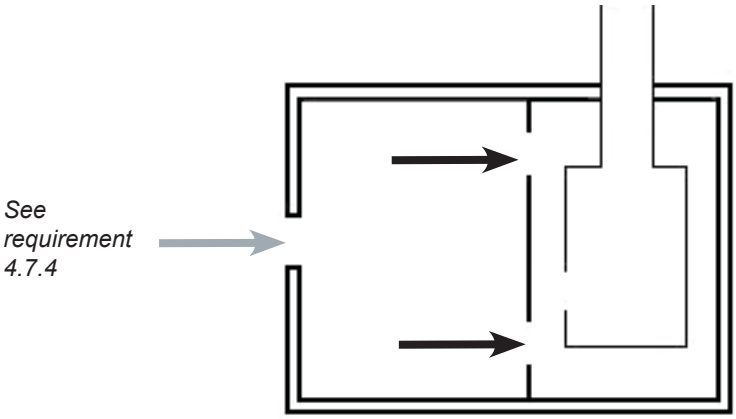

Where in addition to the previous requirement, the heater is to be installed within a compartment, ventilated via an adjoining room or space with connection to outside air, the compartment must be ventilated at high and low level. The minimum free area of permanently open vents must be as follows:-

Minimum free vent area		
Heater Model	**Low level**	**High level**
MAXXflo EVO 30	560 cm^2	280 cm^2
MAXXflo EVO 60	1120 cm^2	560 cm^2

4.7.6 OPEN FLUE APPLIANCE IN A COMPARTMENT VENTILATED DIRECT TO OUTSIDE

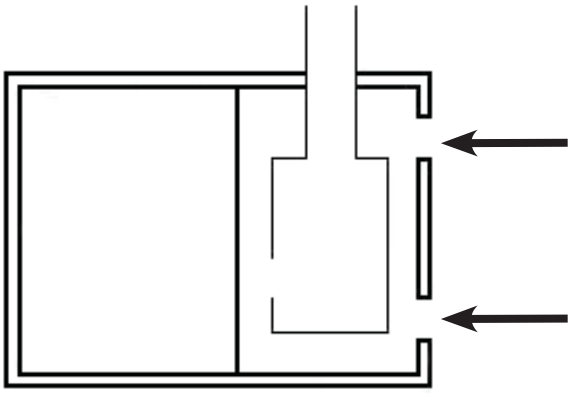

Installations within a compartment ventilated directly to outside air must be ventilated at high and low level. The minimum free area of permanently open vents must be as follows:-

Minimum free vent area		
Heater Model	**Low level**	**High level**
MAXXflo EVO 30	140 cm^2	280 cm^2
MAXXflo EVO 60	280 cm^2	560 cm^2

Adequate ventilation shall be provided to permit the safe operation of any appliance, including other fuel-fired appliances which may be affected by the installation of this gas appliance.

All vents must be permanent with no means of closing, and positioned to avoid accidental obstruction by blocking or flooding

4.7.7 FLUE TERMINAL POSITIONS - B_{23} TYPE (OPEN FLUE)

Terminals should be so positioned as to avoid products of combustion entering openings into buildings or other flues or vents

TYPICAL INSTALLATION

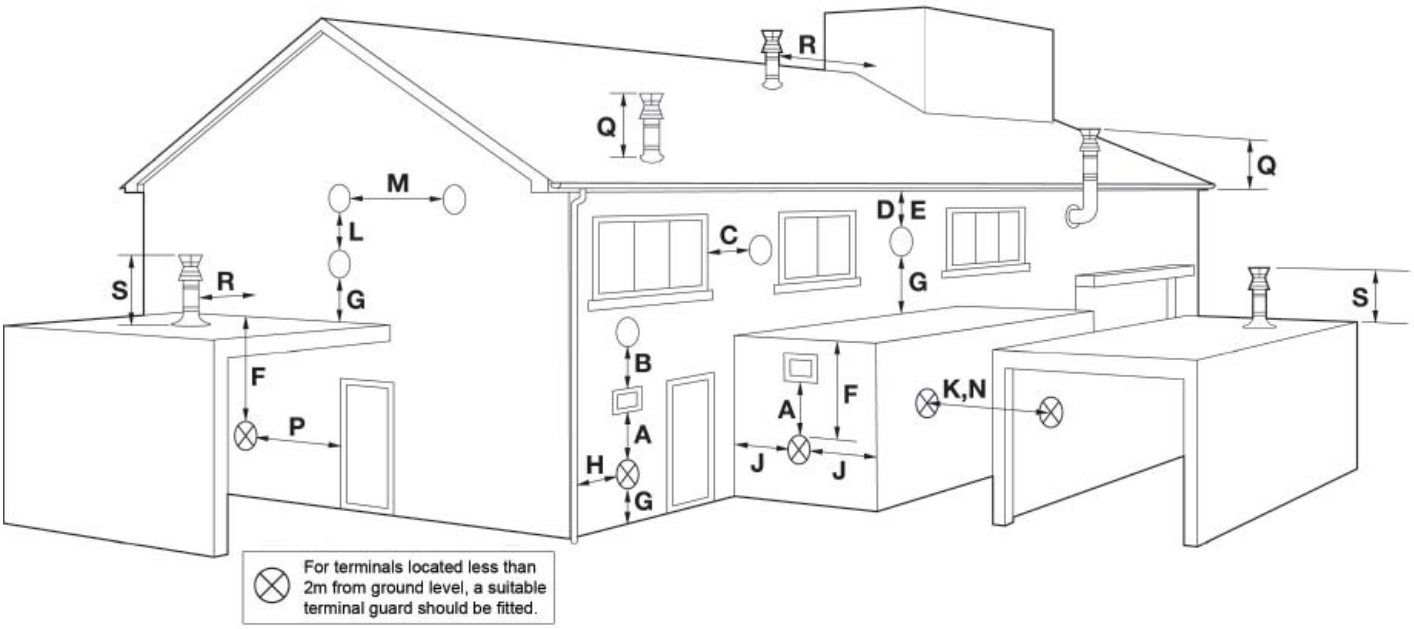

Code	Minimum distance	mm
A	Directly below an opening, air brick, opening window etc	300
B	Above an opening, air brick, opening window etc	300
C	Horizontally to an opening, air brick, opening window etc	300
D	Below gutters, soil pipes or drainpipes	75
E	Below eaves	200
F	Below a balcony or car port roof	200
G	Above ground, roof or balcony level	300
H	From vertical drain or soil pipe	150
J	From an internal or external corner to an alongside boundary	300
K	From a terminal facing a terminal	1,200
L	Vertically from a terminal on the same wall	1,500
M	Horizontally from a terminal on the same wall	300
N	From a surface or a boundary line facing a terminal	600
P	From a opening in a carport (e.g. door, windows) into the building	1,200
Q	Above a pitched roof	300
R	From a roof structure	2,500
S	Above a flat roof	300
	From any other roof flue terminal	300

Not Recommended* - Risk assessment required

4.7.8 ROOM SEALED FLUE ($C_{13,}$ C_{33} C_{53} & C_{63}) SYSTEM

There are four approved room sealed arrangements where both the air inlet and flue discharge terminate outside the building.

Flue and air ducts are supplied to a concentric design and are 80/125mm flue size. See section 4.7.10 for component choices. Flues should slope back to the Heater by three degrees.

Terminal positions must comply with the requirements detailed in section 4.7.13

Flue type C_{13} & C_{33} - If separate terminal outlets are used, they shall fit inside a square of 50cm

Flue type C_{53} - Any terminal used for the separate supply of air and for the evacuation of combustion products must not be installed on opposite walls of a building

Flue type C_{63} - Any terminal used must comply with the requirements of BS EN 1856-1

Ensure the inner flue section is sealed at all joints, otherwise incomplete combustion may result. For ease of assembly, it is recommended that a small quantity of petroleum jelly is used to lubricate each flue seal, before fitting flue sections together.

Any terminal **must** be fitted with a guard if less than 2m above ground level or if it is in a position where it may cause harm to persons as a result of touching a hot surface.

Care must be taken to avoid long horizontal runs of flue duct and continuous discharge of condensate from a horizontal flue terminal - Ensure that the flue slopes back by 3° towards the heater

4.7.9 ROOM SEALED VENTILATION REQUIREMENTS

Where the heater is installed in a **DEDICATED PLANT ROOM** or **COMPARTMENT** no additional ventilation should be required, provided the following ambient conditions are not exceeded:

Air humidity	93% RH @ 25 ^{O} C
Ambient temperature (1.5m from floor level)	32 ^{O} C

Where the room sealed heater is installed in a boiler room with an air change rate >0.5 changes per hour, no additional ventilation is required.

If the air change rate is less than 0.5 changes per hour, ventilation must be provided at low and high levels. The minimum permanent free vent area is as follows:-

Model	Min free area of high & low vent
MAXXflo EVO 30	112cm^2
MAXXflo EVO 60	224cm^2

4.7.10 MAXXflo EVO 30 & 60 KW FLUE PARTS

Part number:	Flue Kits - Description
5103917	VERT FLUE KIT CWH EVO 30, 60 PP 80/125 INC. SUPPORT BRACKET CLAMP & SEAL
7726957	HORIZ FLUE KIT CWH EVO 30, 60 HORIZ FLUE KIT PP 80/125 INC. ELBOW & WALL COVER PLATES
Part number:	**Optional Flue Parts - Description**
5136148	80/125 1 METER CUTABLE EXT.
5136150	80/125 45deg ELBOW 45˚ FLUE ELBOW
5136151	80/125 87deg ELBOW 90˚ FLUE ELBOW
5136152	125 WALL BRACKET
5136154	125 LOCKING CLAMP
5136155	80/125 FLUE SEAL FLUE
7726982	FLUE CONDENSE TRAP
E065	FLAT ROOF PLATE WEATHER SLATE
E066	ANGLED ROOF PLATE WEATHER SLATE
E105	16” x 16” x 7” STAINLESS GUARD
E211	CONDENSATE BOTTLE PP H150
E261	CONDENSATE SYPHON CONNECTION

4.7.11 MAXXflo EVO FLUE SET UP

Horizontal flue

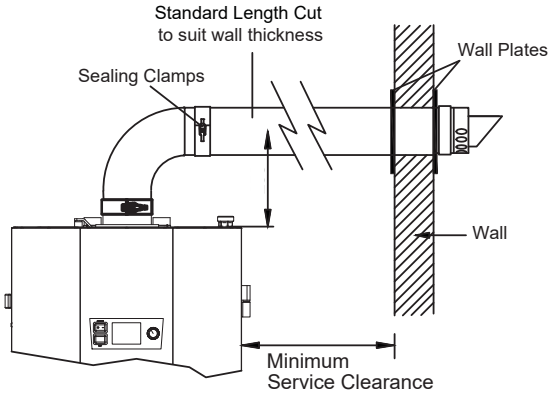

Vertical flue

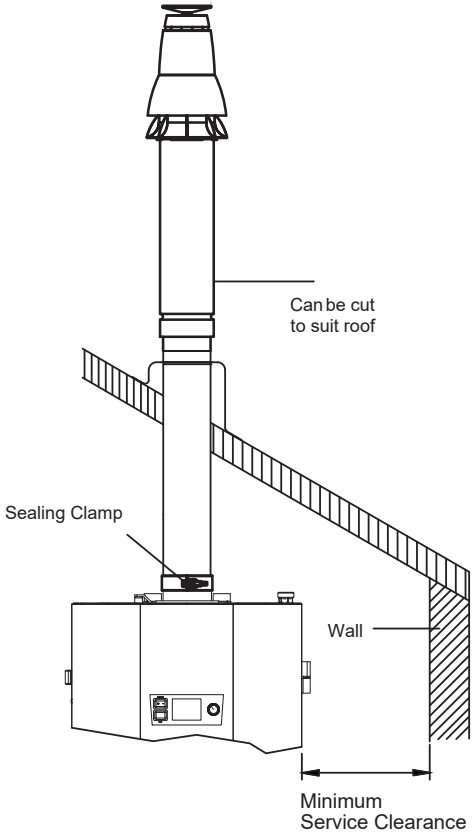

Alternative flue

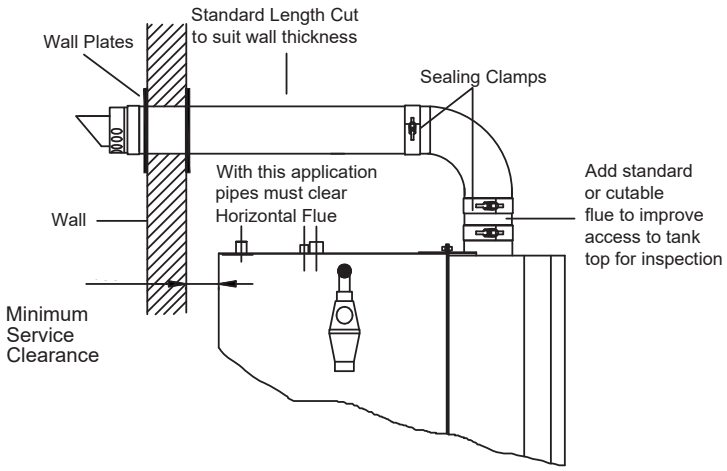

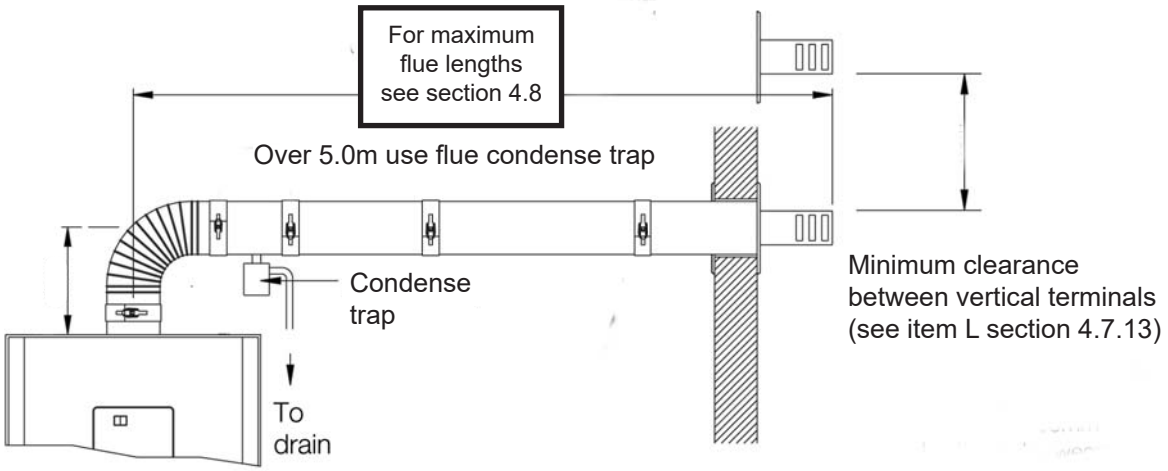
For maximum
flue lengths
see section 4.8
Over 5.0m use flue condense trap
Condense
trap
To
drain
Minimum clearance
between vertical terminals
(see item L section 4.7.13)

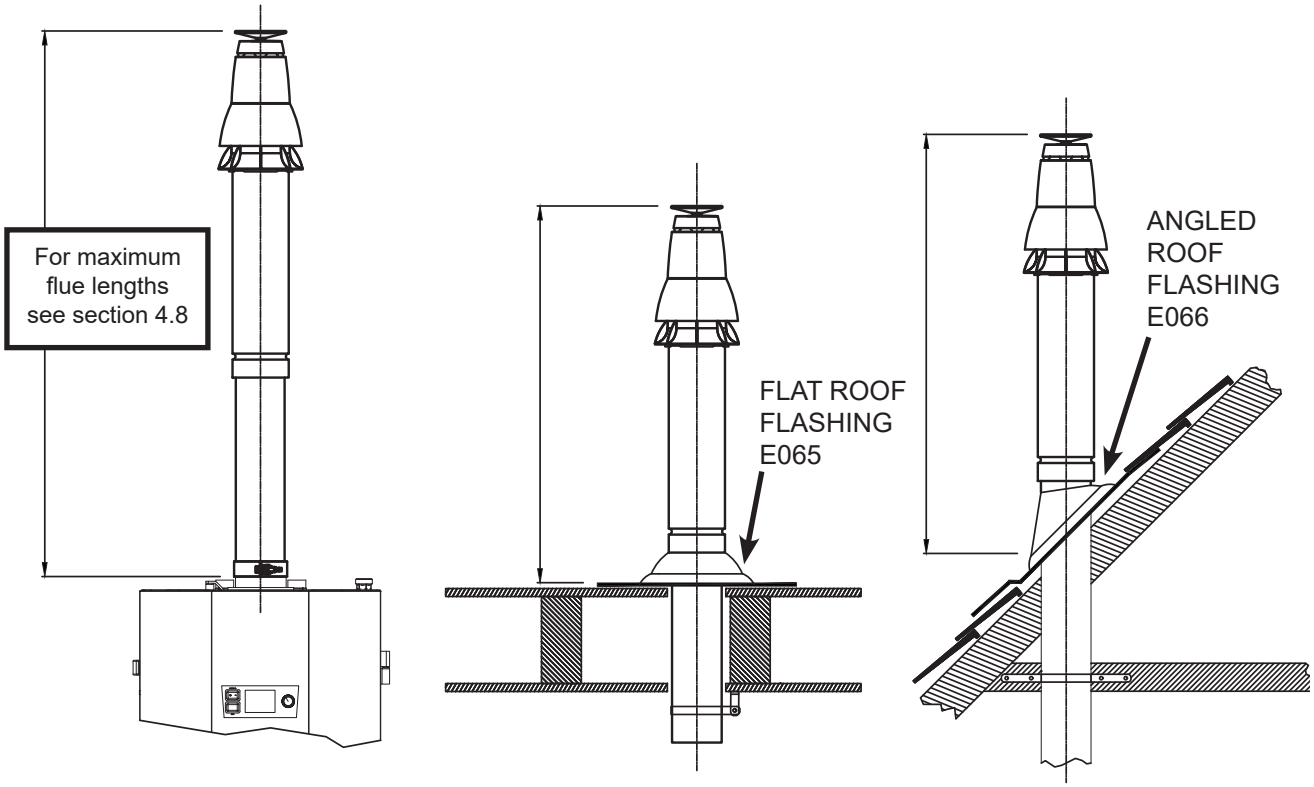
For maximum
flue lengths
see section 4.8
FLAT ROOF
FLASHING
E065
ANGLED
ROOF
FLASHING
E066

4.7.12 MAXXflo EVO 30 & 60 KW FLUE SYSTEM DIMENSIONS

ALL Ø80/125mm CONCENTRIC FLUE

VERTICAL FLUE TERMINAL
C/W CLAMP
PART No 5103917

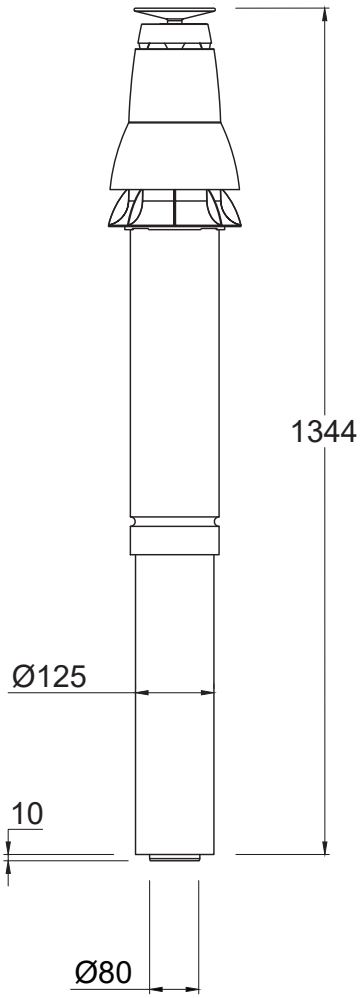

FLUE CONDENSE TRAP
PART No 7726982

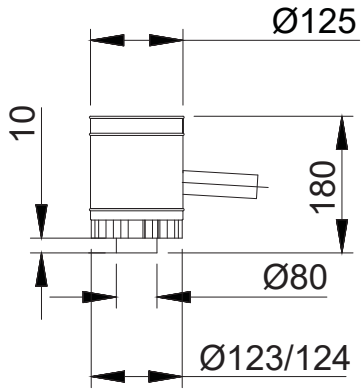

CONDENSE TRAP
PART No E211

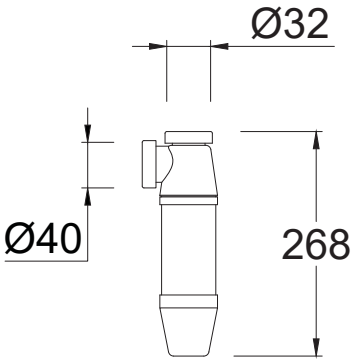

45 ELBOW C/W CLAMP
PART No 5136150

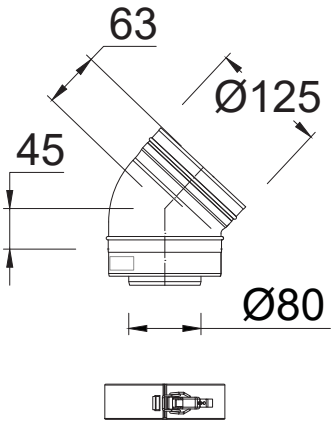

90 ELBOW C/W CLAMP
PART No 5136151

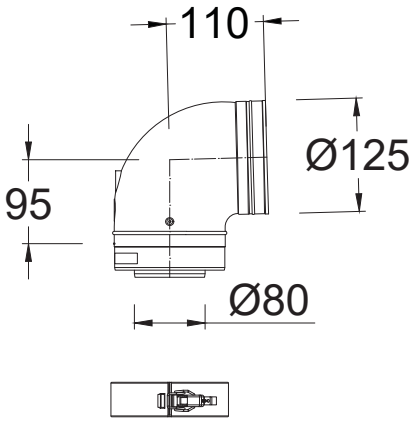

HORIZONTAL TERMINAL C/W WALL PLATES & 90 DEG ELBOW
PART No 7726957

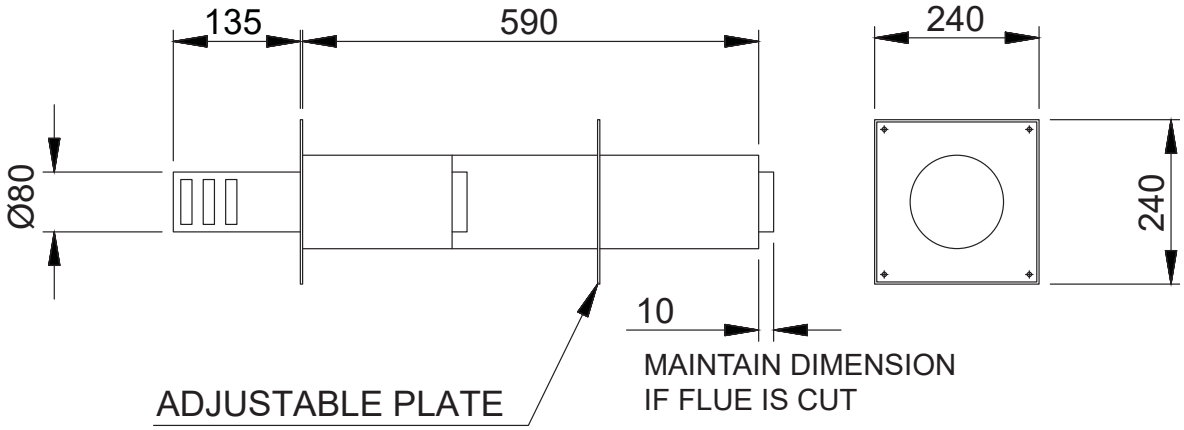

4.7.13 FLUE TERMINAL POSITIONS - C_{13} C_{33} C_{53} C_{63} TYPE (CONCENTRIC / TWIN)

Terminals should be so positioned as to avoid products of combustion entering openings into buildings or other flues or vents

TYPICAL INSTALLATION

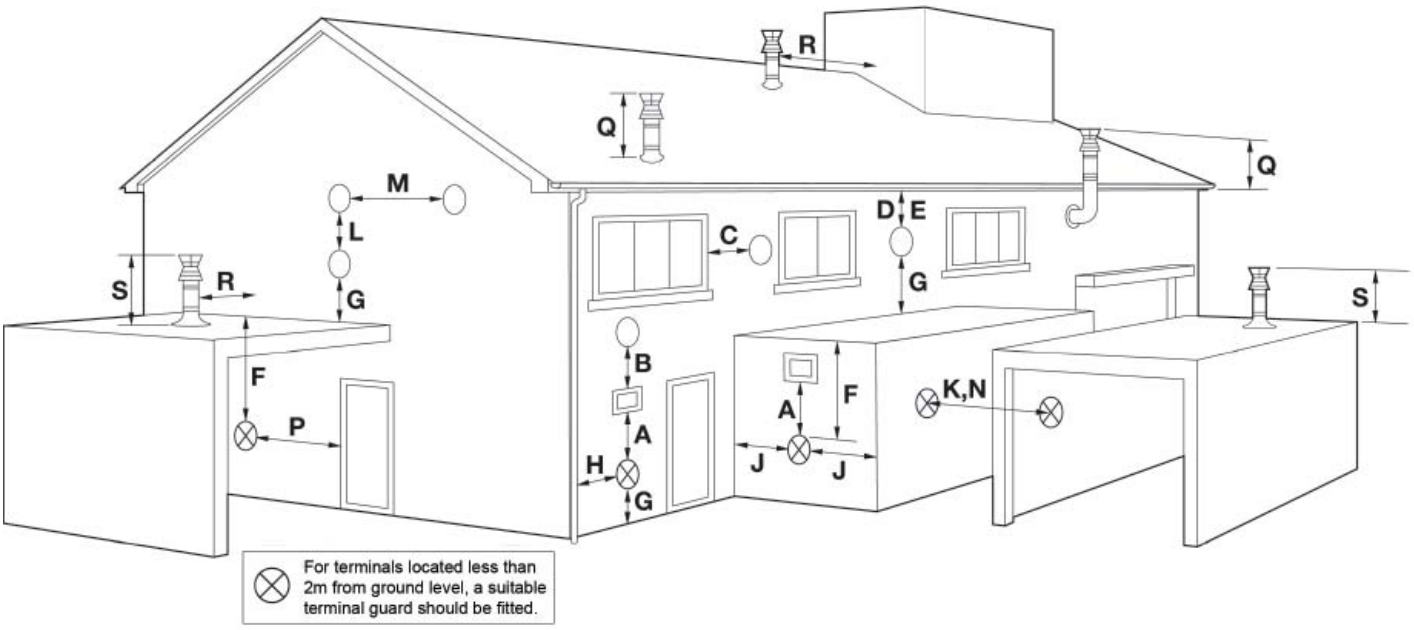

Code	Minimum distance	mm
A	Directly below an opening, air brick, opening window etc	300
B	Above an opening, air brick, opening window etc	300
C	Horizontally to an opening, air brick, opening window etc	300
D	Below gutters, soil pipes or drainpipes	75
E	Below eaves	200
F	Below a balcony or car port roof	200
G	Above ground, roof or balcony level	300
H	From vertical drain or soil pipe	150
J	From an internal or external corner to an alongside boundary	300
K	From a terminal facing a terminal	1,200
L	Vertically from a terminal on the same wall	1,500
M	Horizontally from a terminal on the same wall	300
N	From a surface or a boundary line facing a terminal	600
P	From a opening in a carport (e.g. door, windows) into the building	1,200
Q	Above a pitched roof	300
R	From a roof structure	2,500
S	Above a flat roof	300
	From any other roof flue terminal	300

4.8 MAXIMUM FLUE LENGTHS

Permitted Flue Equivalent Length (FEL) for type B_{23} flue	**=**	**40 metres**
Permitted Flue Equivalent Length (FEL) for type C_{13}, C_{33} flue	**=**	**18 metres**
Permitted Flue Equivalent Length (FEL) for type C_{53} flue	**=**	**36 metres**

The flue duct can discharge either vertically or horizontally by selection of the correct flue terminal. The flue system can be fitted with 90° and 45° bends, as well as extensions.

Each flue accessory such as bends and straight lengths restrict the flue system and have a Flue Equivalent Length (**FEL)** which must be added together to determine the total. Referring to the table below, select a suitable flue system for the particular installation requirement and then calculate the **FEL** of the system, this must not be greater than that stated above. Note: The FEL values below are typical values. Always check with the flue supplier for exact values.

FLUE PARTS 80 / 125mm	F.E.L (C13, C33 TYPE)
1.0 m Concentric Length	1.0 m
0.5 m Concentric Length	0.5 m
Concentric 90° Bend	1.2 m
Concentric 45° Bend	0.8 m
Vertical Terminal kit	1.6 m
Horizontal Terminal kit	1.0 m
Flue Condense Trap	1.5 m
Terminal Guard	N/A
Wall Clamp 125mm	

FLUE PARTS 80mm	F.E.L (B23 TYPE)
1.0 m Length	1.0 m
0.5 m Length	0.5 m
90° Bend	4.0 m
45° Bend	2.0 m
Vertical Terminal kit	2.0 m
Horizontal Terminal kit	1.5 m
Flue Condense Trap	4.0 m
Terminal Guard	N/A
Wall Clamp 80mm	

Example C_{33} : A flue system that uses six straight lengths, three 90° bends and a horizontal terminal.

6 x 1m straight lengths	6.0 m
3 x 90° bends	3.6 m
1 x Horizontal Terminal	1.0 m
Total (within 18m limit)	**10.6 m**

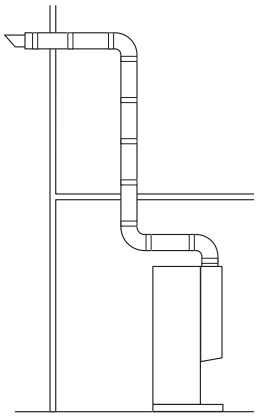

Use of support clamps to secure the flue sections to a solid structure :

Vertical sections should be secured using a clamp every 2.5 m

Horizontal sections should be secured using a clamp every 1.5 m

When the combustion flue system required is longer than 5.0m, it is recommended that a separate system to capture excess condensation formed inside the flue is fitted.

4.9 GAS CONNECTIONS

4.9.1 GAS SUPPLY

The installation of the gas supply must conform, to the Standards and Codes of Practice listed in Section 2.3 of this manual.

This water heater is intended to be installed only on a gas supply with a governed meter.

The gas meter, regulator and supply pipework must be sized so as to provide an adequate supply to the heater in addition to any other appliances connected to the supply (*see 3.3 for Maximum gas consumption rates*).

A 3/4” BSP threaded isolation valve with inlet pressure measuring point is supplied with the heater, to provide a union connection at the top right hand rear of the heater. A minimum of 19mb gas pressure, must be available at the heater inlet, with this heater and other appliances connected to the same gas supply, operating at maximum load.

Note: when replacing a MAXXflo with a MAXXflo EVO and reusing the existing gas isolation valve and fittings, remove the new ¾” Gas Union (MxF) from the MAXXflo EVO, and replace it with 1” X ¾” Reducing Socket (George Fischer Part/N 770 240 225)

4.9.2 GAS PIPE WORK

Where this heater is installed in a plant room or purpose built compartment, a manually operated valve must be fitted. The valve must be easily identified and readily accessible.

The gas supply pipework should be fitted with suitable unions so the Heater can be safely removed for major service or repair.

Check for gas tightness in pipework to the heater by connecting a manometer to the inlet pressure tapping point. Gas and combustion soundness within the heater should also be checked using sense of smell and leak detection fluid. Ensure gas tightness before moving onto commissioning.

4.10 ELECTRICAL & COMMUNICATION CONNECTIONS

This heater **must** be earthed

Isolate the mains electrical supply to the heater before starting any work and observe all relevant safety precautions

External wiring to the heater must be installed in accordance with current Regulations for the wiring of buildings and to any Local Regulations that may apply.

This heater is designed to operate from a 230V, single phase supply fused at 5 amps. Mains input cable should be at least 0.75mm^2, 3 core cable.

The method of connection to the mains electricity supply should facilitate complete electrical isolation of the heater. A fused double pole switch or fused spur box serving only the heater should be used. The point of connection and isolation to the mains electricity supply should be readily accessible and adjacent to the heater, and should be connected to the mains supply as detailed above.

4.10.1 ACCESS TO THE TERMINAL CONNECTIONS

Open the heater front door panel by removing the two screws on the left hand side, to reveal the electrical connections inside (see illustration below).

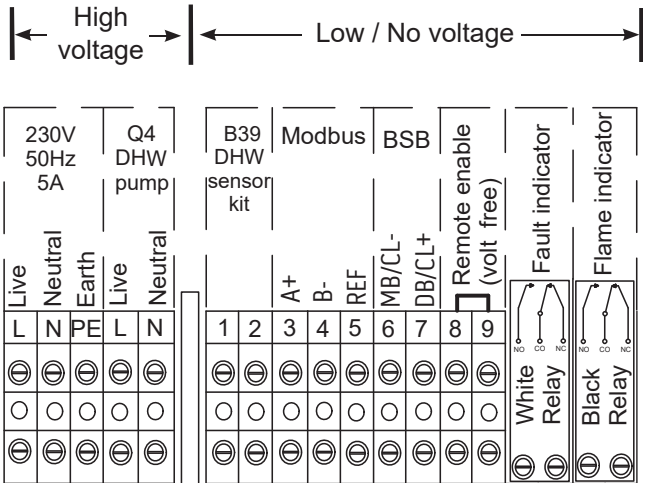

4.10.2 VOLT FREE CONNECTIONS

This heater has volt free connections, which can be used for a Building Management System or a remote indicator panel. These volt free connections are pre-configured to perform the following functions:

Volt free - Remote enable - Closing this connection will activate the DHW system if the switch on the front of the heater is turned to the on position. A loop of wire is pre-installed and this will need to be removed, when installing BMS activation wiring.

Volt Free - Fault Indicator- Following a fault that has been detected by the control system, this relay will activate and close the circuit to indicate that a fault has occurred. Please note that a 1 minute fault reporting delay has been programmed into the controller, but this time delay can be altered via the GUI if required.

Volt Free - Flame Indicator - When the heater is in operation, the relay will activate and close the circuit (a flame has been detected by the controls).

4.10.3 COMMUNICATION CONNECTIONS

This heater has communication connections, which can be used for a Building Management System, web server or expansion of inputs/outputs.

Modbus - Is a BMS language protocol which BMS systems can interface with, either directly or through a gateway. Parameter values can be read and written directly to the Master controller.

MODBUS SETTINGS:

Menu	Parameter	Settings
Modbus	6651 Slave address	If connecting more than one device to the Modbus network, each heater must have its own unique slave address.
	6652 Baud rate	All devices in the Modbus network must have the same rate of transmission. The higher the transmission rate the shorter the lines between the devices has to be (doubling the baud rate halves the cable lengths). Recommended baud rate with a cable of less than 500m length “19,200”
	6653 Parity	All devices in the Modbus network must have the same parity. Recommended setting “Even”
	6654 Stop bit	All devices in the Modbus network must have the same number of stop bits (1 or 2). If 2 stop bits are set, then parity must be set to none. Recommended setting is “1”

Comments on Date and time values

Year (8 bit value)	2000 - 2099 = 100...199
Month	1 = January...12 = December
Time program	Time value is in periods of 10 minutes. Example: Switch on time of 06:10 = H-Byte value: 37 Switch off time of 22:00 = L-Byte value: 132

BSB (Boiler System Bus) - Is the communication system of the water heater, which is used to send and receive information from the other controllers (if fitted) and can be used by the optional Siemens OZW672 Web Server, to provide access to the heater via the Internet or mobile phone app. Please contact Andrews Water Heaters for further advice.

5.0 COMMISSIONING GENERAL

After installation of pipe work and fittings the water systems can then be filled and evacuated of all air before commencing commissioning. This is best done with the door and outer cover removed (see 4.2 for details)

5.1 FILLING AND REMOVAL OF AIR

5.1.1 DHW TANK AND SYSTEM

In order to ensure safe removal of air from the hot water system, please perform the following:

1. Check that the tank drain shut off valve is closed.

2. If the heater is connected to a hot water recirculation system, open the isolation valve immediately before the connection point to the tank.
3. Turn on all hot water draw off taps.
4. Turn on the cold water supply and fill the DHW tank.
5. Close each hot water draw off tap when water is discharged.
6. After initial filling, open each hot water draw off tap in succession and check that all the air is vented from the system.
7. Check for leaks inside and outside of the heater.
8. Turn on power to heater and operate the Q1 circulation pump by disconnecting the wiring from the front flow sensor (B2) of the heat exchanger. This will automatically operate the pump.

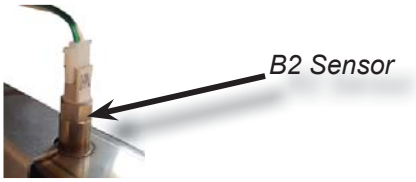

9. Continue to operate the pump until the sound of air in the system has diminished.
10. Replace the flow heat exchanger wiring and press the reset for 1s when bleeding is complete.

If the pump does not appear to be rotating (no sound of air when the pump is first turned on), place a cross head screw driver into the hole at the centre of the pump head. Push the screwdriver inwards and turn to free the pump.

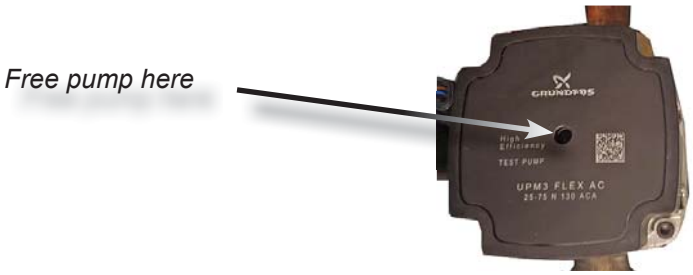

It is <u>ESSENTIAL</u> that all air is removed from the heater before proceeding with commissioning the heat engines , otherwise permanent damage may occur to the heat exchangers and this damage is not covered by warrantee.

5.2 COMMISSIONING THE HEAT ENGINE

5.2.1 IMPORTANT NOTES

The gas mixture and burner off-set gas rate (minimum load rate) is preset by the manufacturer. Please DO NOT attempt to change the settings of the off-set governor behind the sealed cover.

The burner on this heater have been tested and set by the manufacturer, but this will need to be checked again when the heater has been fully installed into its operating environment. The commissioning process involves the operation of the burner at the maximum possible heat load.

5.2.2 HEAT ENGINE COMMISSIONING

Ensure that all the numbered points included in section 5.1 “Commissioning General” have been completed successfully before proceeding with the following:

NOTE: A flue sample point is provided in the flue section immediately above the heat exchanger. To use this sample point, carefully remove the rubber bung

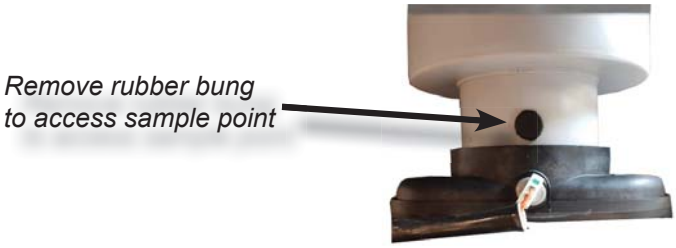

- Turn on power supply.
- Access the flue sample point (see above), careful not to pull on the wires when removing and replacing the connector.
- Insert a calibrated combustion analyser (approximately 65mm) inside the flue sample test point
- Turn on gas supply
- Ensure that the heater is set to “Standby” or “O” on the front switch

- Use the control thumb wheel to select “Setup” page and press the thumb wheel to select “Special operations” (see below)

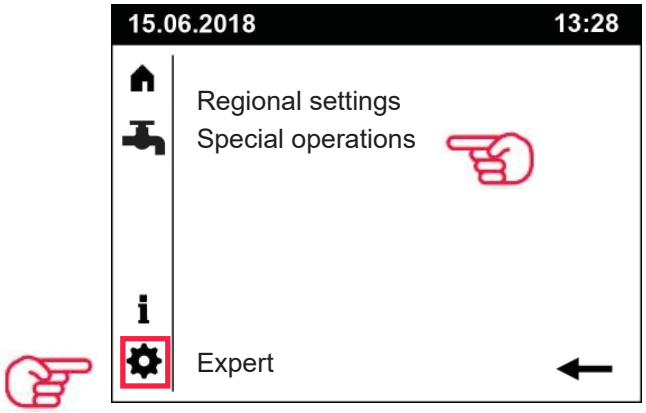

- Use the thumb wheel to select the “Chimney sweep” function and use the thumb wheel to activate this function. Select and activate “Full load” for the burner output (see below)

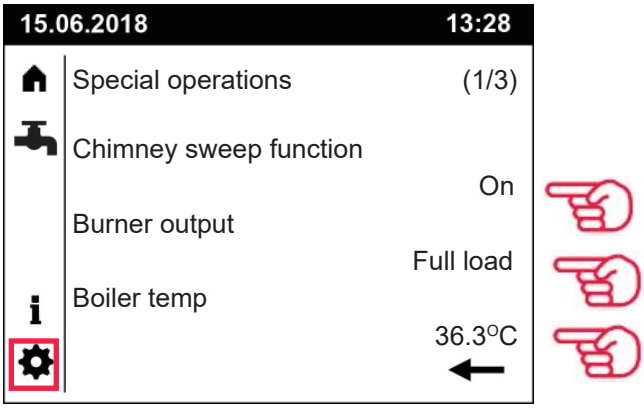

- If this is the first time that the heat engine has been operated, allow for several ignition attempts before ignition is achieved whilst the gas pipework is being purged of air. It may be necessary to press the reset button to start the ignition attempts again.

- Once ignition is successful, allow at least three minutes for the heat engine to warm up fully before checking the combustion.

- Ensure the Water heater temperature remains below 70°C during the commissioning process (see above illustration), if necessary open water outlets to introduce cold water into the tank keeping the water heater temperature down.

- With the heater door open, the CO_2 combustion figure for G20 will be as follows:

Models	CO_2	Maximum CO expected	Approximate Throttle screw depth (mm)
MAXXflo EVO 30	9.1% (+/- 0.2%)	130	12.3 (+/- 1.0mm)
MAXXflo EVO 60	9.0% (+/- 0.2%)	160	11.7 (+/- 1.0mm)

- If adjustment is required, remove the dust cover of gas valve throttle adjustment screw and insert a 4mm allen key or medium flat blade screw driver to adjust (see illustration on next page).

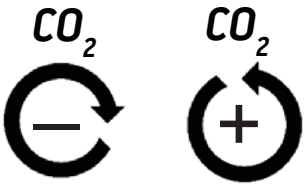

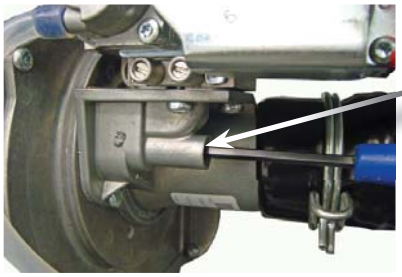

MAKE ADJUSTMENTS IN 1/8 TURN STAGES AND WAIT ONE MINUTE BETWEEN EACH ADJUSTMENT

If you are experiencing CO readings that exceed 200 ppm after 30 minutes of burner operation, please first check that your gas analyser is functioning correctly and then contact Andrews Water Heaters on the customer support number given on the rear cover of this manual, for advice.

- With the door of the heating closed and secured with the two clips. Keep the water heater temperature below 70°C (by opening water outlets). Check the total gas consumption figure using the following table:

		G20 GAS (38.8 MJ/m³)
		Metric meter
Model	gross kW input	*Time taken to consume 0.1m³ of gas*
MAXXflo EVO 30	31.1	90.1s (+/- 4.5s)
MAXXflo EVO 60	62.2	52.2s (+/- 2.6s)

- The gas consumption must be within 5% of the gross kW input value of the data plate
- When the adjustments are complete, disable the chimney sweep function and wait until the heat generator stops before continuing (see Figure below).

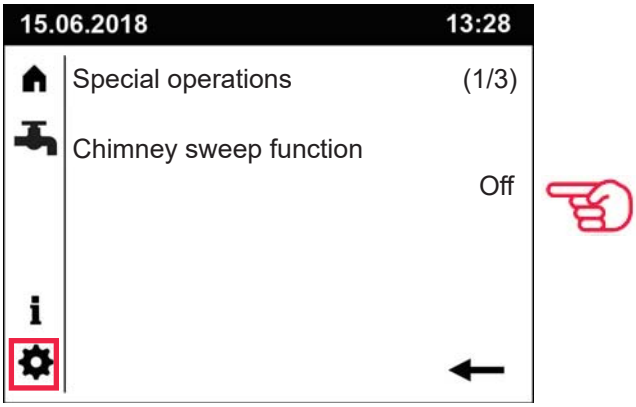

- Remove the gas analyser and replace the rubber bung in the flue sample point
- Replace the throttle screw cover

5.3 CONVERSION FROM SECOND FAMILY (NATURAL GAS - G20) TO THIRD FAMILY OF GASES (PROPANE - G31)

This water heater is supplied from the factory already set up for G20 Natural Gas, but each heater can be converted on site to operate on Liquefied Propane Gas (G31).

This conversion must be carried out by a competent qualified person using only the parts provided by the manufacturer.

Before work commences turn off the Mains Electricity and Gas Supply to the heater. The conversion can then be achieved by following these instructions, and must be carried out to all heat exchangers.

- Remove the throttle adjustment screw cover
- Compress the spring clip holding the black air intake hose onto the venturi and remove the hose

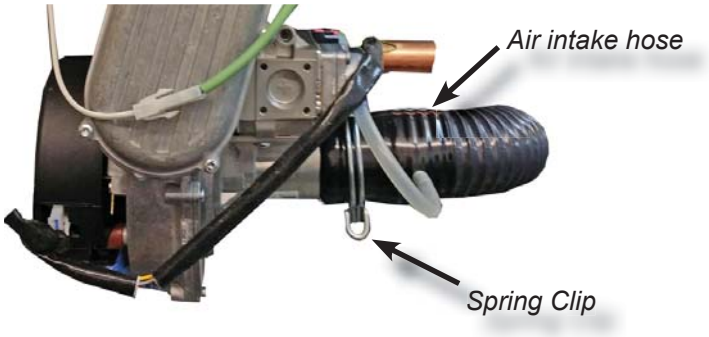

5 x Venturi screws

- Undo and remove the 5 screws securing the venturi to the gas valve and fan
- Remove the venturi completely and if you can, do not disturb the cork gasket if it is stuck to one of the two metal surfaces (this will be helpful during re-assembly)
- Check the size of the LPG orifice is correct (refer to table overleaf) and fit the orifice into the rubber seal that is located in the outlet of the gas valve (see illustrations below)

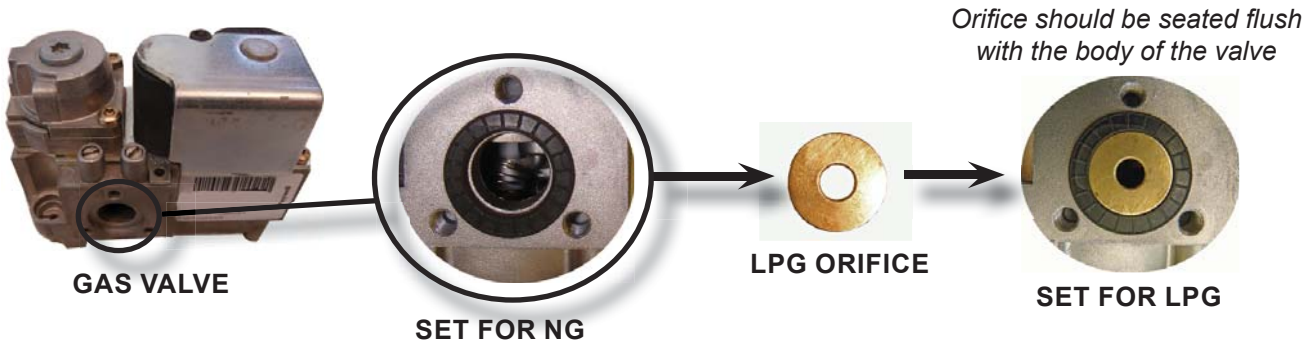

- Before re-assembly examine the condition of the cork gasket and replace if it is damaged
- Re-assemble the venturi between the fan and gas valve and secure onto the fan using the 2 screws

Please ensure that the cork gasket between the fan and the venturi is correctly placed before fixing with the two venturi screws. Place a screw through the venturi to hold the gasket in place when refitting to fan (see illustration below)

- Re-secure the venturi to the gas valve with 3 screws, ensuring that the rubber seal and orifice remains in place on the gas valve
- Initially turn the throttle adjustment screw according to the table below:

Model	MAXXflo EVO 30	MAXXflo EVO 60
LPG Orifice size	**5.2mm**	**5.55mm**
Initial Adjustment G20 to G31	**2.1 turns clockwise**	**0.5 turns anti-clockwise**
CO_2 Combustion Figure - LPG (G31)	**10%** (+/- 0.2%)	**9.5%** (+/- 0.2%)

- Follow the commissioning procedure in section 5.2 with the exception that the CO_2 combustion figure should now be as listed in the table above for LPG (G31)

It should not be necessary to turn the throttle screw more than two turns away from the initial adjustment setting to achieve ignition. If this is the case, ensure that the components are refitted correctly and also be aware that the gas carrying pipes may need purging before gas is available for ignition at the burner.

- Allow one minute between adjustments, and do not move the adjuster more than 1/4 turn at any one time
- Replace the cover over the throttle adjustment screw, when adjustment is complete
- Affix the new LPG serial number data label supplied with the heater over the top of the existing natural gas data plate

Fix new data plate over original

- Fit LPG warning label to heater cover.

5.4 FROST PROTECTION & LEGIONELLA

5.4.1 FROST PROTECTION

The Heater is fitted with automatic Frost Protection. Provided there is mains power, gas connected and the heater is not in a lockout condition, if the temperature registered by the DHW tank temperature sensor falls below 5°C the heat engine will ignite to bring DHW tank temperature up to 6°C before turning off again.

5.4.2 ANTI-LEGIONELLA GENERAL

Legionella bacteria is commonly found in water. The bacteria multiply where temperatures are between 20 - 45°C and nutrients are available. The bacteria are dormant below 20°C and do not survive above 60°C.

Legionnaires' disease is a potentially fatal type of pneumonia, contracted by inhaling airborne water droplets containing viable Legionella bacteria. Anyone can develop Legionnaires' disease, but the elderly, smokers, alcoholics and those with cancer, diabetes or chronic respiratory or kidney disease are at more risk.

The Health and Safety Executive in the UK Advises conducting a complete risk assessment of the hot and cold water systems and ensure adequate measures are in place to control the risks. Recognised measures include the following:

- Cold water should be stored and distributed below 20ºC
- Hot water cylinders should store water at 60ºC or higher.
- Hot water should be distributed at 50ºC or higher (any thermostatic mixer valves need to be fitted as close as possible to outlets)
- Regular temperature checks of hot water tanks (at least every month)
- Regular temperature checks of cold water tanks (if used, at least every 6 months)
- Regular temperature checks of outlets closest and furthest from the hot water tank
- Flush out infrequently used outlets at least weekly and clean and de-scale shower heads every 3 months
- Inspect the DHW tank for signs of debris during the annual service. Clean as necessary.
- Design water systems to minimise Legionella growth, by:
  - Keeping pipe work as short as possible
  - Avoid dead legs/dead ends in pipe work
  - Keep water turning over regulary. Fit an anti-legionella valve on the expansion vessel to maintain circulation around the vessel
  - Insulating circulation pipes and any cold water tanks

Other methods to control legionella include copper and silver ionisation and biocide treatments. Consult a water treatment expert for advice on these measures.

This heater has been designed to minimise the formation of Legionella bacteria. The pumped tank charging process ensures that the water at the bottom of the tank reaches the same temperature as in the rest of the tank and all of the water is circulated, with no stagnation possible. A hatch in the main tank can be used for inspection and cleaning. Only metals listed in 4MS are used in this heater, and the heater has a WRAS UK approval pending.

5.4.2 ANTI-LEGIONELLA SETTINGS

When activated via the heater controls, the anti-legionella function will be satisfied when the DHW tank temperature sensor (B3) has detected that the anti-legionella setpoint has been reached for the length of time set (1646 Legionella function duration). However, when the return sensor (B39) has been installed the temperature requirement to satisfy the anti-legionella function moves from the DHW tank sensor (B3) to the return sensor (B39) mounted on the return pipe before its return to the DHW tank (see illustration on next page).

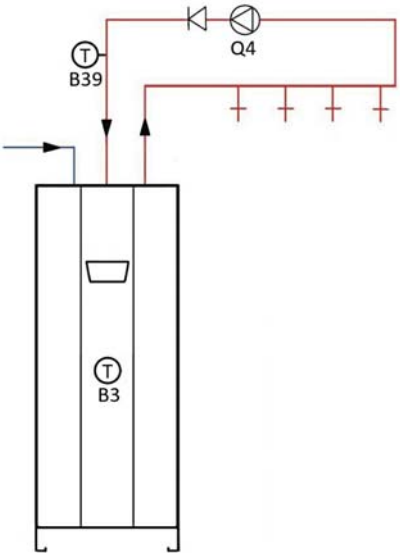

Menu for Anti-legionella function

Line no	Description	Factory default	Notes
1640	Legionella Function	Off	Choose to have the legionella function activated on a fixed weekday (parameter 1642), every (parameter 1641) number of days or switch the function off.
1641	Legionella function periodically	7 days	No of days before the legionella function will activate
1642	Legionella function weekday	Sunday	Fixed day the legionella function will activate
1644	Legionella function time	01:00	Time the legionella function will start
1645	Legionella function setpoint	70°C	The setpoint to be achieved for the legionella function
1646	Legionella function duration	10 mins	The length of time the DHW tank sensors and B39 circulation return sensor (if fitted) should achieve the setpoint, before the function is completed. If the legionella function cannot be performed successfully within a 48 hour period, an error message will be displayed.
1647	Legionella function circulation pump	On	Choose whether the circulation pump Q4 is on or off when the legionella function is active

In a return system that has a heat loss of more than 3°C, the temperature reached at the B39 sensor may never be enough to confirm that the anti-legionella setpoint has been achieved.

For example: If the legionella requirement was for a 70°C setpoint for 1 minute and the heat losses on the return system were 5°C, The temperature leaving the tank would be at a maximum of 73°C (anti-legionella setpoint + maximum boost) and this would return to the tank at 68°C. The anti-legionella function would never be satisfied in this scenario and the controls would attempt to achieve the anti-legionella setpoint for a total of 48 hours before the controls finally give up and an error message results.

Alternative solution when return pipe system losses are high and the return sensor is installed
If the return sensor functionality is to be retained, an alternative method to achieve a regular anti-legionella function would be to set the following:

- Set “1612 Reduced setpoint” as the normal DHW tank temperature (e.g. 60°C)
- Set “1610 Nominal setpoint” as the temperature required for an anti-legionella cycle (e.g. 70°C)
- Set “5070 Automatic push” to OFF
- Use time program 4 to set the length of time and the day that you want to run your anti-legionella cycle (every day is recommended) – For guidance on the length of time required please refer to the table below:-

Temperature	Time required at setpoint
70°C	1 MINUTE
66°C	2 MINUTES
60°C	32 MINUTES
55°C	6 HOURS

The figures given in the table above are for guidance only. The advice given in Approval Code of Practice (ACOP) L8, “Legionnaires’ disease: The control of legionella in water systems”, and HSG274 Legionnaires’ Disease Technical Guidance, should be followed.”

5.5 FINAL CHECKS & USER HANDOVER

5.5.1 SETTING THE TIME CLOCK AND DHW TIME PROGRAM

NB. The DHW time clock is factory programmed to optimise this heaters efficiency at the declared load profile under Eco-design Regulations.

*It is essential that the time / date is set correctly and the DHW operation times have been programmed according to the requirements of the end user. Refer to the instruction sheet **"QUICK START GUIDE"** or section 2.2 onwards of the **"CONTROLS OPERATING INSTRUCTIONS MANUAL"** for guidance on how to setup the controls.*

5.5.2 CLEANING THE HEATER

The casing is finished with a polyester coating and will mark if abrasive cleaners are used. It should be cleaned using standard non abrasive cleaning products. A soft cloth used with soap and warm water should be sufficient to clean the casing.

5.5.3 USER HANDOVER

When commissioning is satisfactorily completed the user must be instructed on the safe use and operation of the heater and in particular detail:

- As a bare minimum go progress through the "Quick start guide" with the user, to cover the basic operation of the heater
- Hand over this manual and any other literature supplied.
- Explain the importance of air vents and the flue outlet system, and that they should not be altered or interfered with in any way.
- Explain that the DHW tank temperature should not be set below 60°C for any length of time as this can allow the growth of legionella bacteria. Discuss what methods are in place or setting options to limit the formation of legionella bacteria (see previous page)
- Remind the user that in order to comply to the regulations in force, the heater has to be serviced regularly (at least once every 12 months) and only an engineer who is trained and competent should carry out any work on the heater (i.e. a Gas Safe registered engineer).
- Explain that between 10:00 and 10:30 every Friday all pumps being controlled by the heater will be activated in turn for 30 seconds each. This will occur even if the heater is in standby mode. This function is automatic and is designed to help prevent pumps from sticking if the heater has not been in operation for some time.

5.6 FAULT FINDING

5.6.1 OPERATION SEQUENCE

To operate this heater you must have sufficient gas volume and be of the correct gas type. Electricity supply, 220-240v 50Hz and a valid demand from the DHW system.

1. The circulation pump is turned on.
2. The gas control starts the Ignition sequence following a demand for DHW.
3. The Fan operates on the heat engine as a pre-purge of the heat engine airways.
4. After 15 seconds of fan operation, a spark is created at the electrode and the gas valve is opened.
5. The ignition spark and gas valve opening will last for a maximum of 10 seconds.
6. A 3 second period of flame stabilisation will occur immediately after a successful ignition.
7. At the end of the stabilisation period the controls will check that a flame is present. If no flame is detected, stages 1 - 5 will be repeated 4 further times (within 24 hours) before a permanent lockout of that heat engine occurs.
8. On successful confirmation of a flame, the fan speed is then increased by the controls to suit the demand conditions.
9. The heat engine will continue to operate until DHW demand has been met, the control timer has turned off the demand or the controls detect a fault condition.

5.6.2 FAULTS AND LOCKOUTS

If the heat engine is unable to ignite or detects a safety condition, the controls of the heat engine will lockout and will be prevented from firing again, without manual intervention. The display will show the symbol along the top bar of the GUI display to indicate that there is a fault.

The fault will have to be cleared before that heat engine will function again. Selecting from the info pages menu will provide the fault detail (see section 6.5 at the end of this manual for the possible error codes). Press the RESET button on the front of the heater and provided the condition has been corrected the heat engine will run through the ignition sequence again and the symbol will disappear from the display after a short delay.

5.6.2.1 FAULT DISPLAY EXAMPLES

The display will show a if the heater has recorded a fault. More information can be obtained by selecting the info pages menu . See example screen:

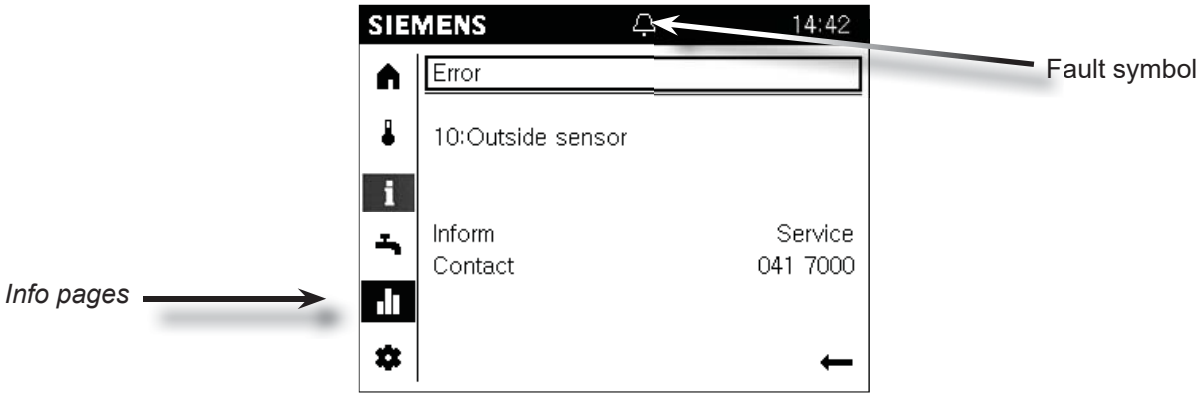

A Lockout condition should not be repeatedly reset. If the condition persists then a qualified repair engineer should be called.

6.0 MAINTENANCE

IN ALL CASES, BEFORE WORK COMMENCES TURN OFF THE MAINS ELECTRICITY AND GAS SUPPLY TO THE HEATER

6.1 ROUTINE INSPECTION INTERVALS AND REQUIREMENTS

To ensure continued efficient operation of the heater it is recommended that it is checked and serviced at regular intervals. The frequency of servicing will depend upon the particular installation and usage but in every case a maximum of twelve months should be allowed between service inspections.

It is a legal requirement that any service work should be carried out by a suitably qualified and Gas Safe registered personnel.

6.1.1 RECOMMENDED MINIMUM SERVICING REQUIREMENTS (ANNUALLY OR EVERY 4,000 HOURS)

Does not exclude annual gas safety checks required under Gas Safety (Installation and Use) Regulations 1998.

1. Inspect and clean the following, by removing the burner:
   - Burner tube
   - Vapour seal
   - Rope Gasket
   - Combustion chamber
   - Spark electrode
   - Ionisation electrode
2. Check condition of condensate pipework and empty and clean condensate trap
3. Check ignition performance
4. Inspect internal air and flue system
5. Inspect cover seal for damage or leakage
6. Perform flue gas analysis and set CO_2 if necessary
7. Inspect and flush DHW storage tank (especially in hard water areas)

Replace any worn or defective components as necessary

Follow the procedures given in section 6.2 for parts removal in addition to notes on the following pages:

6.1.1.1 INSPECT AND CLEAN BURNER ASSEMBLY

To view the burner and the inside of the heat exchanger it is recommended that you remove the front of the heat exchanger complete with the fan, venturi and gas valve.

The following steps need to be completed before the combustion chamber and burner can be inspected:-

- Isolate heater from the electrical supply.
- Open the outer heater cover door by removing the screws on the left hand side and opening the door of the heater.
- Disconnect the electrical connections to the fan

- Disconnect the venturi from the fan, by removing the two cap head screws. Remember to retain the cork gasket for re-assembly

- Disconnect the spark and Ionisation leads
- Undo the six burner door nuts

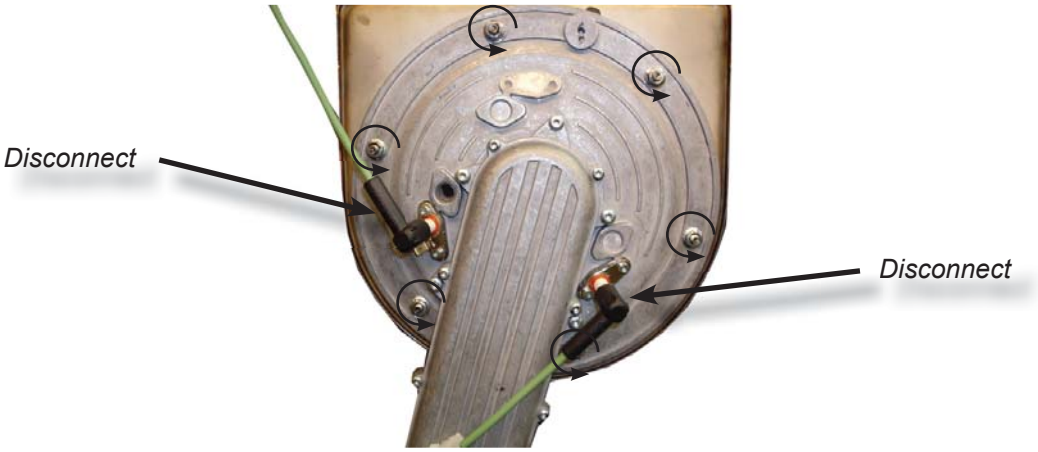

- Pull the whole burner assembly outwards and left away from the gas valve

6.1.1.1 INSPECT AND CLEAN BURNER ASSEMBLY (CONT)

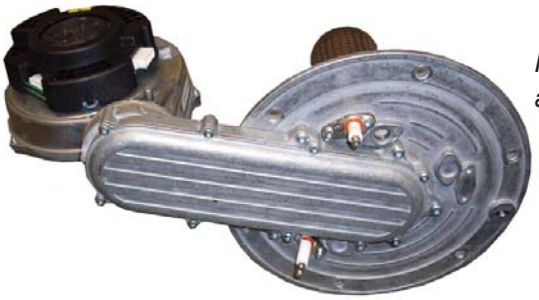

Removed burner assembly

Once assembly is free from the heat exchanger, carry out the following inspection:

- Inspect the black silicone and rope gaskets on the inside of the heat exchanger door. Replace seals if there are any signs of damage and in any case replacement of the silicone gasket every two years is recommended.
- Inspect the burner tube for signs of damage. Replace if any damage or burnt areas are found.

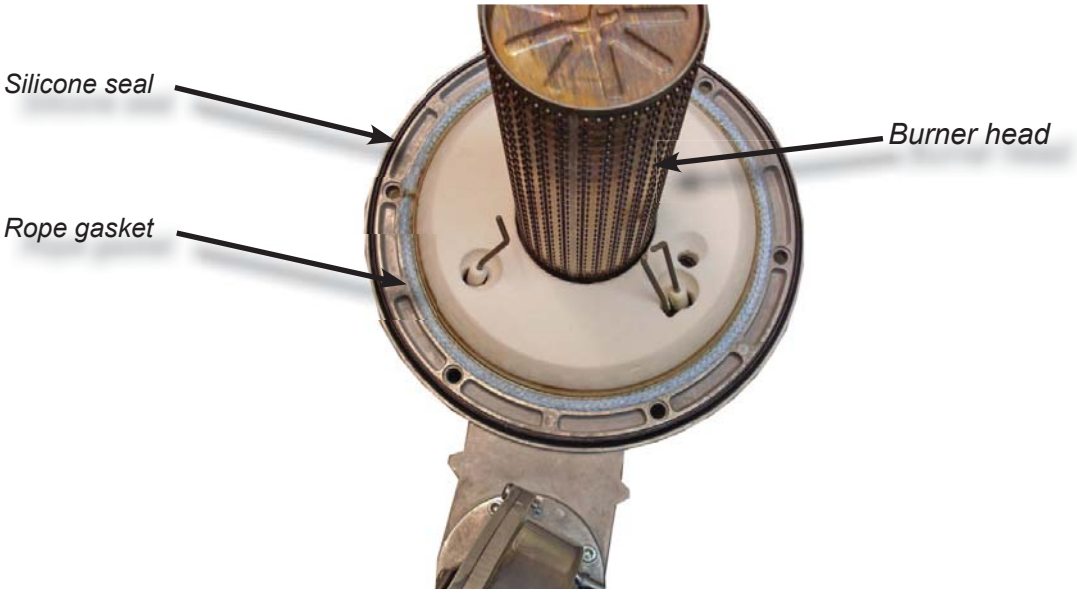

- Inspect the inside of the heat exchanger for signs of carbon build up or blockages between the tubes.

- The heat exchanger can be cleaned using a nylon (nonmetallic) brush and vacuum cleaner, to remove loose deposits.

- White vinegar can be used to remove stubborn deposits, by spraying the vinegar onto the coils and then waiting five minutes before scrubbing with a nylon brush and finally rinsing away all deposits with clean water, until the condense pipe runs clear.

- At the end of the cleaning process unscrew the condense trap bowl, clean out and refit.

- Inspect the Ionisation and spark electrode assemblies for damage and wear

5.0mm (+/- 0.5mm)

- Reassembly is the reverse

When refitting the venturi onto the fan inlet ensure that the cork gasket is in the correct position by using one of the screws to hold the gasket in place

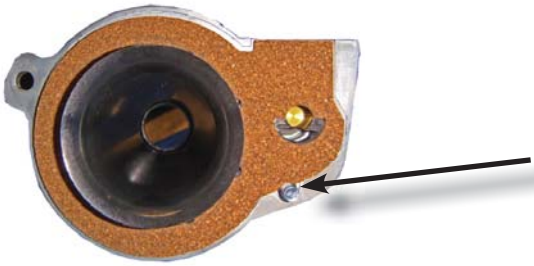

Screw will hold gasket in correct position

6.1.1.2 SPARK ELECTRODE AND IONISATION ELECTRODE

In order to maintain optimum reliability, it is recommended that both sets of electrodes are replaced every two years regardless of their condition. Both of these electrodes are best inspected when they are still in place and the entire heat exchanger door has been removed (see 6.1.1.1), but can also be inspected by carrying out the following :

- Turn off the heater and pull off the electrode lead(s).
- Unscrew the two screws retaining the spark electrode in position and carefully withdraw. Inspect for damage and correct spark gap (see illustration below).

- Undo the two screws retaining the flame sensing electrode.
- Withdraw and inspect for wear or damage.
- Replace electrode(s) if older than 24 months or if worn or damaged.
- Assembly is the reverse, ensure the gasket is undamaged and correctly placed.

6.1.1.3. CASE AIR & FLUE OUTLET SEALS

- Push on the flue sections to ensure firm connection between the joints.
- A visual inspection should establish there are no leaks around any of the seals, including the flexible air duct to the venturi. Replace if there is any doubt as to the integrity of the seals.

6.1.1.4. CONDENSATE PIPEWORK AND SYPHON TRAP

Inspect all joints in the condensate pipework for leaks

The pipes themselves should be clear, flexible and no signs of any cracking should be visible. Investigate any white coloured areas anywhere on the condense pipe work.

The lower bowl of the syphon should be unscrewed, examined and cleaned. Check its connection to the heat exchanger and pipework for leaks

6.1.1.5. GAS RATE & COMBUSTION

The gas rate and combustion flue analysis must be carried out when the heater is operating at maximum loading. See Section 5.2 for full details on how to check and adjust the CO_2.

To check, re-establish gas and electricity supply and then operate each heat engine for at least 5 minutes. If adjustment is required remove the cover over the throttle screw and turn anti-clockwise to increase CO_2 or clockwise to decrease.

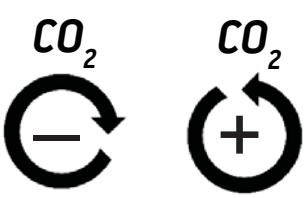

MAKE ADJUSTMENTS IN 1/4 TURN STAGES AND WAIT ONE MINUTE BETWEEN EACH ADJUSTMENT

6.1.1.6 INSPECT AND FLUSH DHW STORAGE TANK

The storage tank should be inspected annually and cleaned if required. To gain access for inspection please carry out the following procedure:

- Turn off the electrical supply to the heater
- Shut of the cold water supply to the tank
- Open a hot water outlet until water flow stops
- Shut off hot water outlet and return feed to the tank.
- Drain off approximately 5 - 10 litres of water from the tank drain point (see illustration below).

- Remove the insulation material on the top of the tank to reveal the tanks connections.
- If necessary, disconnect any pipework connections to allow removal of the Tank Inspection Hatch.

- Loosen nut on Tank Inspection Hatch and unscrew bolt to the end of the thread, but do not remove.
- Wrap a length of wire around the threaded shaft underneath the clamp and hold the wire to prevent the hatch falling into the tank, when the bolt is removed
- Tap the hatch, so that the hatch drops downwards and is held in place by the nut.
- Remove the bolt and clamp and while holding the threaded shaft allow the hatch to drop down and then angle the hatch and remove it through the opening.

With the use of a torch it should be possible to see to the very bottom of the inside of the tank. If the tank is clear of deposits then no further action is necessary and the hatch can be replaced as a reverse of the above procedure. Take care not to drop the hatch into the tank when replacing it.

If the tank requires flushing, allow all the water to flow from the tank by opening the drainage tap fully . A hose pipe connected to the cold water supply, can be inserted into the hatch opening to wash away any remaining deposits out of the drainage tap. In areas with hard water, it maybe necessary to flush out the water heater more frequently.

To refill the tank after inspection or flushing, perform the following procedure:

- Close the drainage tap
- Secure the inspection hatch
- Turn on the cold water supply to the tank and open the hot water return pipework
- Open hot water outlets in turn until all air is expelled
- Turn on the power to the heater and activate a hot water demand.

6.2 REMOVING AND CHANGING COMPONENTS

NONE OF THE CONTROLS ARE REPAIRABLE . IF THEY ARE NOT FUNCTIONING THEY MUST BE REPLACED In all cases, before work commences turn off the mains electricity and gas supply.

The following items do not require isolating water before removal:

- DHW tank temperature sensor (B3)
- Flue temperature sensor (B8)
- AVS37 GUI display
- LMS14 PCB Replacement
- Spark generator
- Combustion fan
- Overheat thermostat
- Gas valve
- Electrode removal
- Back flow prevention flue valve

The following items require isolation of water before removal and bleeding air afterwards:

- Heat exchanger
- Circulation pump

See the following sections for an explanation on how to change these components:

6.2.1 DHW TANK TEMPERATURE SENSOR (B3)

- Remove and withdraw the foam insulation above the top of the tank
- Gently pull the sensor up the dip tube

- Undo the bulkhead seal and pull the sensor through to the front.

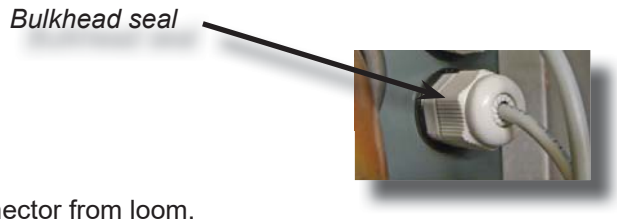

- Unplug connector from loom.

- Cut off securing tie and remove sensor.
- Replacement is the reverse.

6.2.2 FLUE TEMPERATURE SENSOR (B8)

This is located at the Flue outlet of the heat exchanger.

- Unplug the sensor from the loom (squeeze the catch to release).

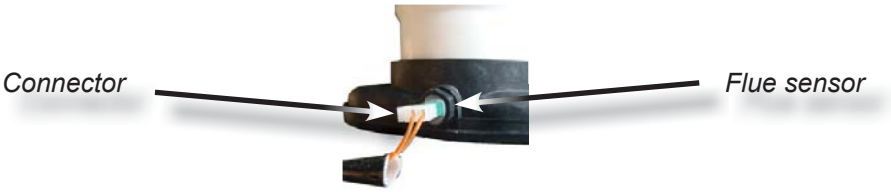

- Remove sensor by unscrewing anti-clockwise
- Replacement is the reverse.

6.2.3 AVS37 GUI DISPLAY

This is located in the centre of the heater inside the front cover.

- Switch off electrical supply to heater
- Remove the 4 fixing screws located at the rear of the screen.

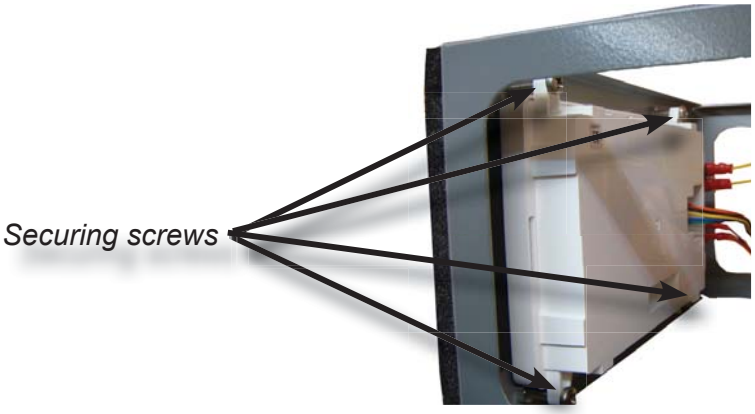

- Push off the wiring connector from the rear of the GUI
- Replacement is the reverse.

6.2.4 LMS14 PCB REPLACEMENT

ATTENTION: Electrostatic sensitive PCB - Handle PCB by edges only and if available wear an earth wristband

This is located on the bridge. It is important that the correct PCB replacement is used. Check that the model matches the replacement PCB

- Carefully push off all the connectors on the PCB (be careful not to pull on the wires).

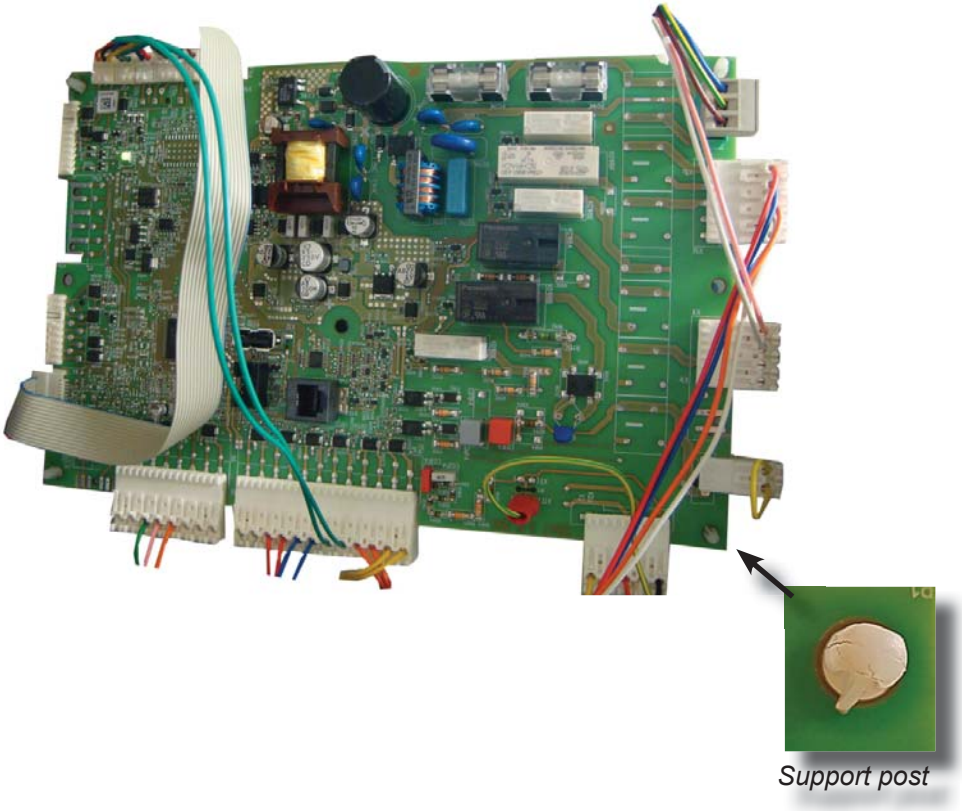

- Release in turn, all seven PCB support posts by squeezing the barb together at the end of the support and withdrawing the board from each support, one at a time.
- Replacement is the reverse.

6.2.5 SPARK GENERATOR

- Remove the power connections
- Remove the ignition cable
- Remove the 2 fixing screws

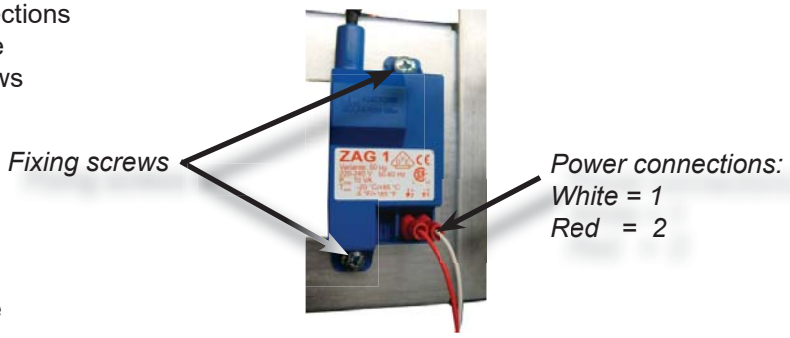

- Replacement is the reverse

6.2.6 FAN

The combustion fan is best removed when the whole burner assembly has been detached from the heat exchanger (see 6.1.1.1), but can also be removed individually if these steps are followed:

- Turn OFF the electricity to the heater.
- Carefully remove the two electrical connectors from the fan.
- Remove the two cap screws securing the venturi to the fan.

- Remove the four bolts securing the fan to the air arm.

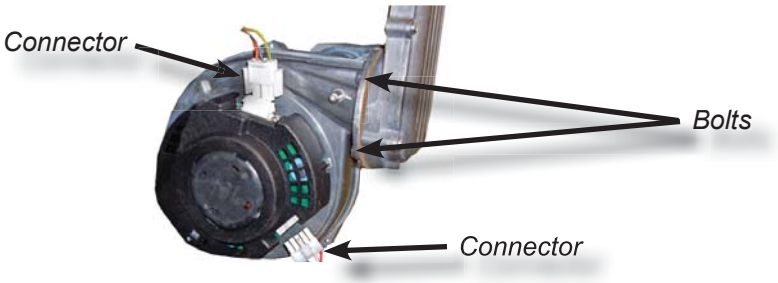

- Slide fan off venturi and remove
- Inspect both the venturi gasket and air arm gasket and replace if damaged.
- Replacement is the reverse

Please ensure that the cork gasket between the fan and the venturi is correctly placed before fixing the two venturi screws. Place a screw through the venturi to hold the gasket in place when refitting to fan

- Operate the heat engine and check for gas leaks. After five minutes check the rate and combustion is correct to the table on page 8. Adjust using the throttle screw on the gas valve clockwise to decrease CO_2, anti-clockwise to increase CO_2 if required. (see 5.0 for details)

6.2.7 OVERHEAT THERMOSTAT

- Locate the overheat thermostat behind the GUI bridge (see illustration below)
- Remove the thermostat from the clip by pushing the assembly upwards
- Disconnect the two wires
- Assembly is the reverse

6.2.8 GAS VALVE

- Turn off the gas supply at the burner gas cock isolator

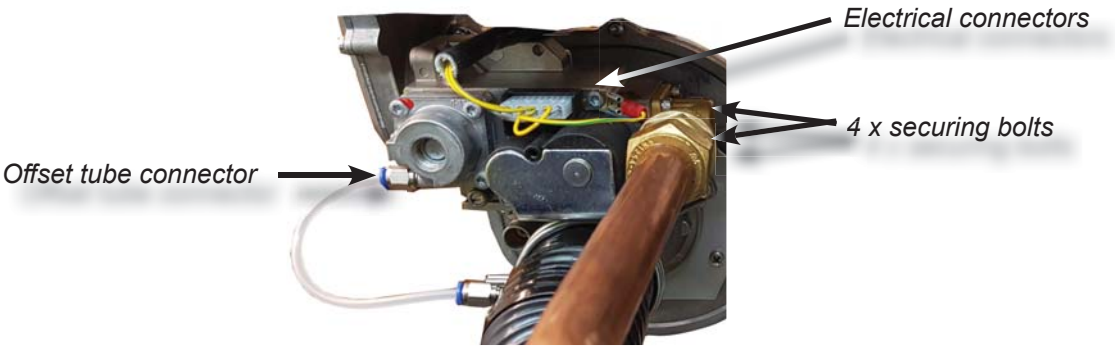

- Carefully remove the electrical connectors of the gas valve
- Remove the cap screws securing the gas pipe to the valve
- Remove the offset tube from the gas valve by pushing the end of the connector inwards and then pulling the pipe out and transfer the connector to the new gas valve
- Release the gas valve from the venturi by undoing three 4mm cap screws

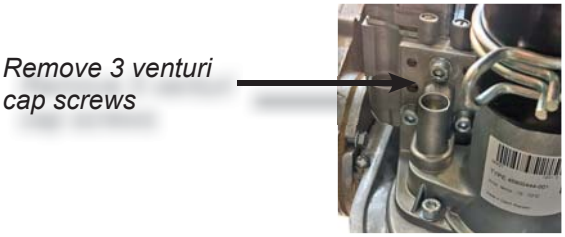

- Transfer the rubber gasket to the new gas valve and orifice if fitted .
- Replacement is the reverse.
- Operate the heat engine and check for gas leaks.
- After five minutes check the rate and combustion is correct to the Data table. (*page 11*). Adjust using the throttle adjustment screw on the gas valve if necessary. Turn clockwise to decrease CO_2 anti-clockwise to increase CO_2 (*see 5.0 for details)*

NB Valve Coil resistances are 2.8k and 1.6k ohms

6.2.9 ELECTRODE REMOVAL

These are located on the front of the heat exchanger.

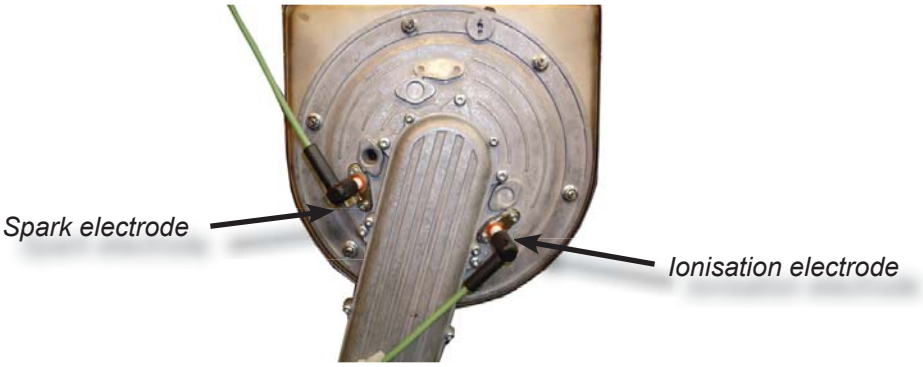

- Carefully pull off the electrical connectors.
- Undo the two screws retaining the bracket and withdraw.
- Replacement is the reverse ensuring that the gasket seal is placed correctly and is in good condition.

6.2.10 BACK FLOW PREVENTION VALVE

- Remove the 8 Torx screws holding the cover plate onto the air arm and gently pull cover away from the seal.
- The Back Flow Prevention Valve (BFPV) is located inside the cover itself and can be slid out for inspection.

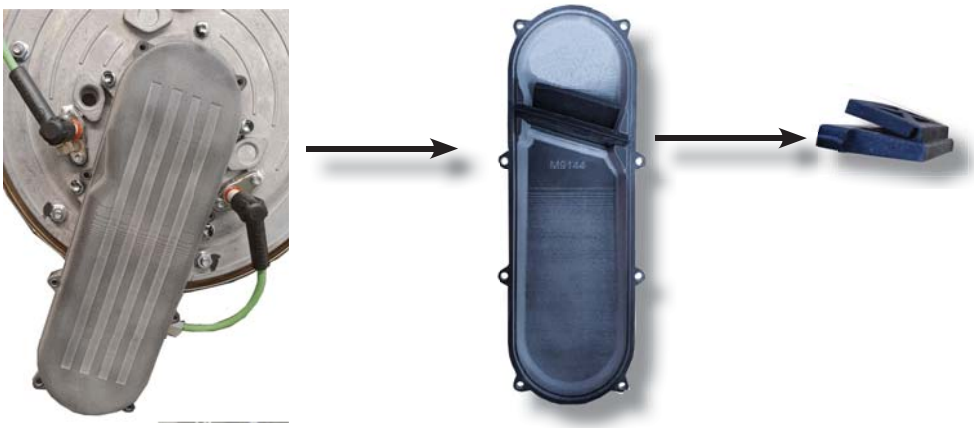

- Inspect BFPV for damage and operation. Replace if necessary
- Inspect air arm seal for damage. Replace if necessary
- Assembly is the reverse

6.2.11 CIRCULATION PUMP (Q1)

- Close the shut off valve before the pump, or if optional pressure sensor kit fitted close off the shut off valves either side of the pump
- Drain off water from the DHW tank (approximately 30 litres) or if the optional pressure sensor kit is fitted use the drain points between the shut off valves
- Remove the PWM and power connectors, using a small flat blade screwdriver to lift the white tab before pulling each connector free.
- Undo the unions at the top and bottom of the pump body and remove pump.
- Fit the new pump seals

- Replacement is the reverse
- Refill and bleed of air
- Operate the pump by pulling the electrical connector off the heat exchanger front flow sensor (B2)

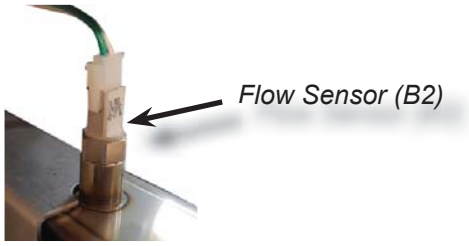

When all sound of air has stopped, reconnect B2 sensor and press the reset for 1s

Changing the following components will require a partial draining of the water system. Once completed it is essential that all the air is removed from the heat exchanger before the heater is operated. To not do so may damage the heat exchanger and invalidate the warranty.

6.2.12 HEAT EXCHANGER

- Turn off the water isolator located before the heat exchanger and drain off approximately 50 litres from the tank (if pressure sensors are fitted both sides of the heat exchanger can be isolated)

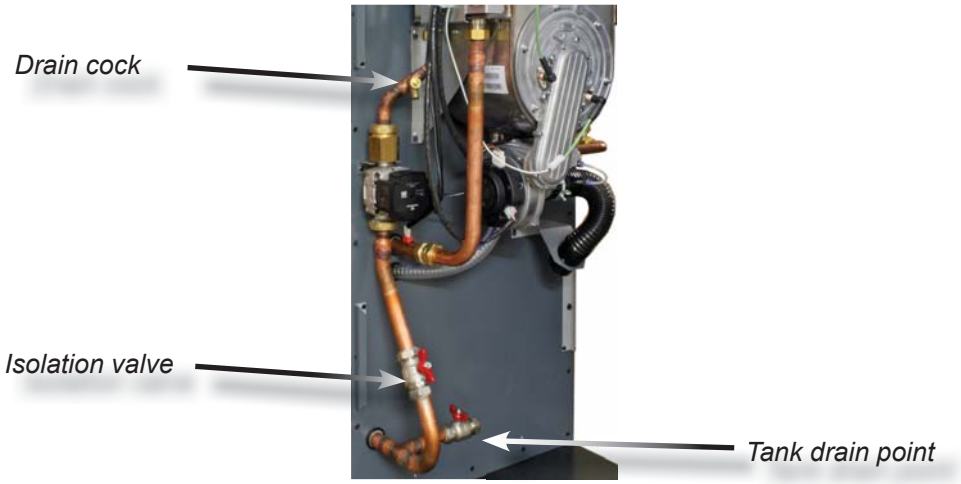

- Drain water using the drain point(s) to ensure the heat exchanger is as empty as possible.
- Disconnect all electrical connections to the flue, flow and return sensors.
- Disconnect the flue from the top of the heat exchanger by pushing the flue section upwards so that it clears the heat exchanger

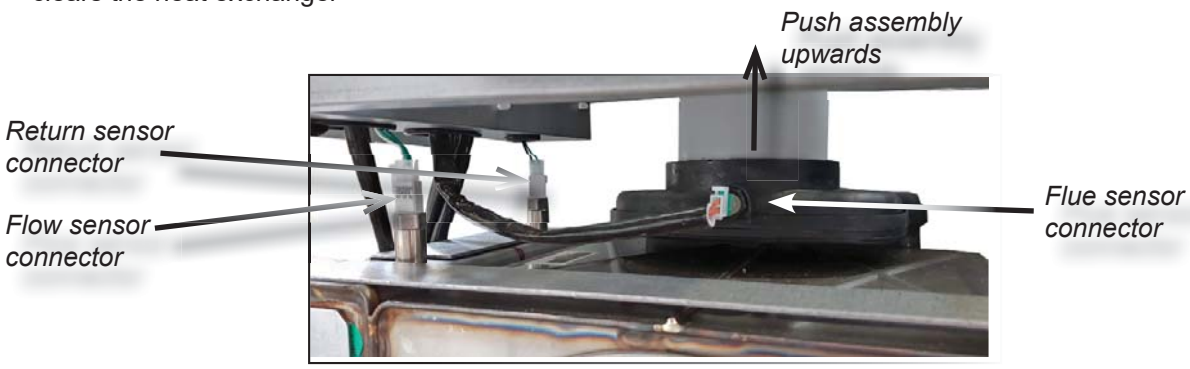

- Disconnect the electrical connections to the ionisation probe, ignition probe, fan and gas valve and place wiring to one side.

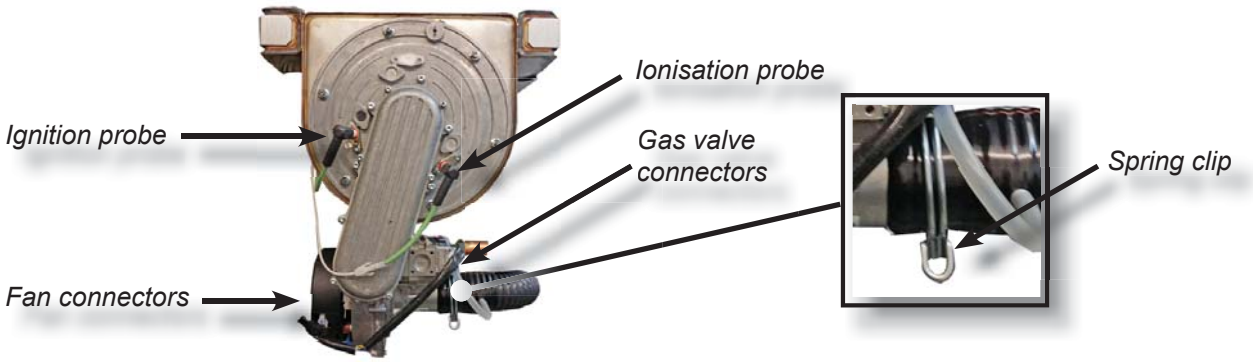

- Remove the air intake from the venturi by squeezing the spring clip together, and disconnect offset tube

- Remove the 6 heat exchanger door bolts and remove the whole burner assembly and put to one side.

Removed burner assembly

- Unscrew the flow and return pipework from the heat exchanger.
- Unscrew the flow and return sensors form the heat exchanger and retain
- Disconnect the condense drain connection by releasing the jubilee clip and pulling the pipe off

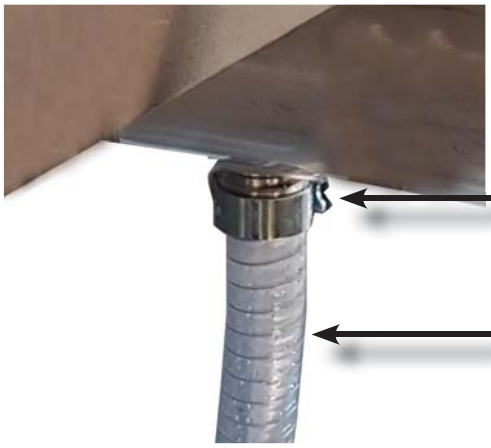

- Remove the 6 screws of the heat exchanger retaining clamps and remove the clamps

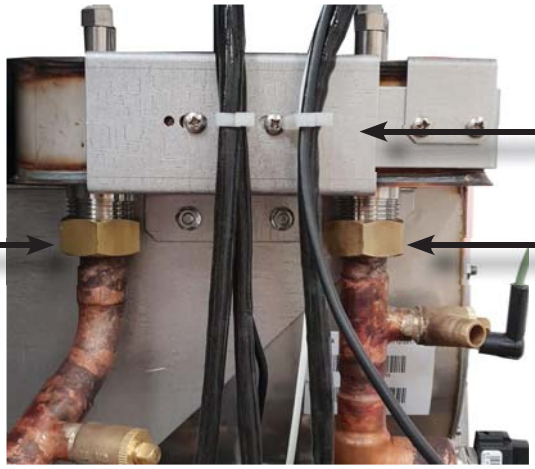

Warning this item is heavy - Before releasing the brackets ensure support is available

- Carefully lift out the heat exchanger
- Fitting is the reverse

After refitting ensure no air is present in the heat exchanger by running the unit with the gas turned off until the heat exchanger is operating quietly

6.3 COMPONENT ILLUSTRATIONS
TANK & SUNDRY SPARES

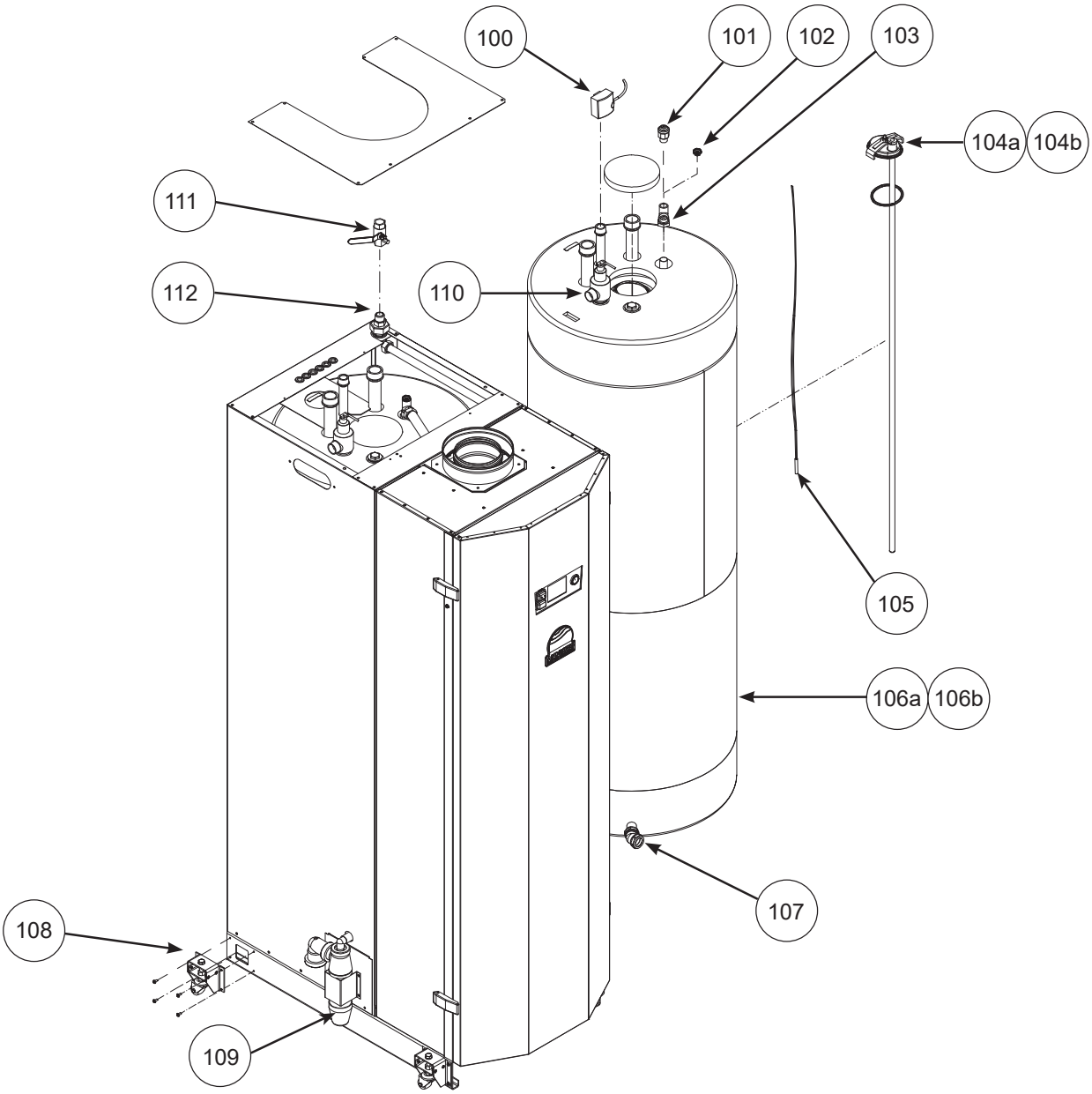

Item No.	Description	Part Number
100	RETURN SENSOR KIT	7720071
101	OPTION - ANTI VAC VALVE	7709364
102	AIR VENT 1/2”	7617084
103	28X28X1/2” COMPRESSION TEE	7709367
104a	200 LITRE ACCESS HATCH ASSY INC O-RING	7720063
104b	300 LITRE ACCESS HATCH ASSY INC O-RING	7720064
105	TEMP SENSOR DHW TANK B3	7709329
106a	200 LITRE TANK	7617080
106b	300 LITRE TANK	7617079
107	28MM OBTUSE COMP. ELBOW	7709372
108	OPTION - CASTOR ASSEMBLY	7709385
109	CONDENSATE TRAP	7617073
110	TEMPERATURE/PRESSURE RELIEF VALVE 10 BAR/95°C	7727952
111	3/4” GAS COCK C/W TEST NIPPLE	7733025
112	3/4” GAS UNION M&F	7733026

6.3 COMPONENT ILLUSTRATIONS (CONTINUED)

INNER COVER & DOOR SPARES

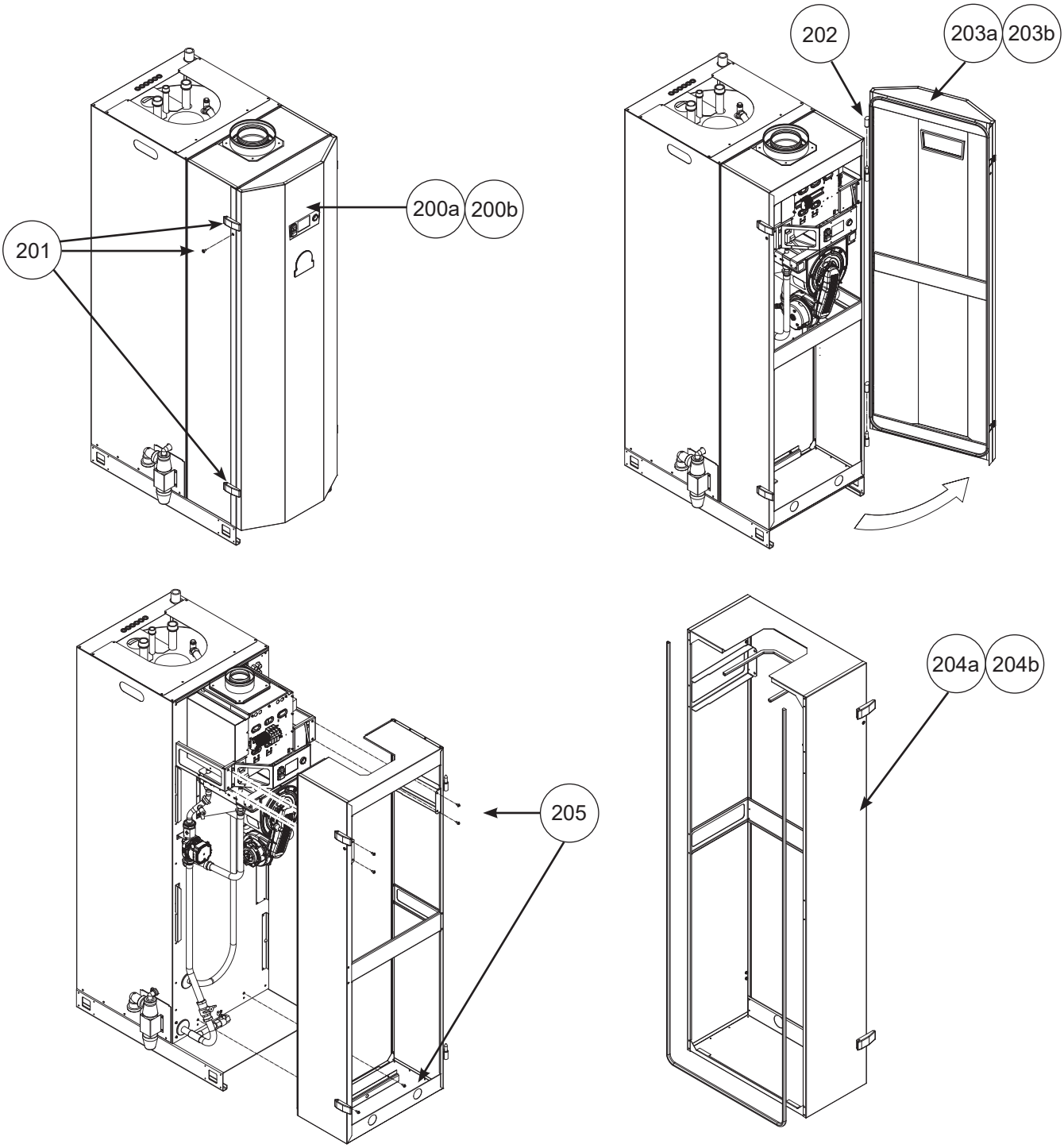

Item No.	Description	Part Number
200a	DOOR FOR MAXXflo EVO 200L	7725796
200b	DOOR FOR MAXXflo EVO 300L	7725797
201	DOOR CLOSING LATCH SET	7709375
202	DOOR HINGE SET	7709376
203a	DOOR GASKET MAXXflo EVO 200L	7709377
203b	DOOR GASKET MAXXflo EVO 300L	7709378
204a	INNER COVER MAXXflo EVO 200L	7709379
204b	INNER COVER MAXXflo EVO 300L	7709380
205	INNER COVER FIXING SCREWS	7709381

6.3 COMPONENT ILLUSTRATIONS (CONTINUED)

GENERAL COMPONENTS

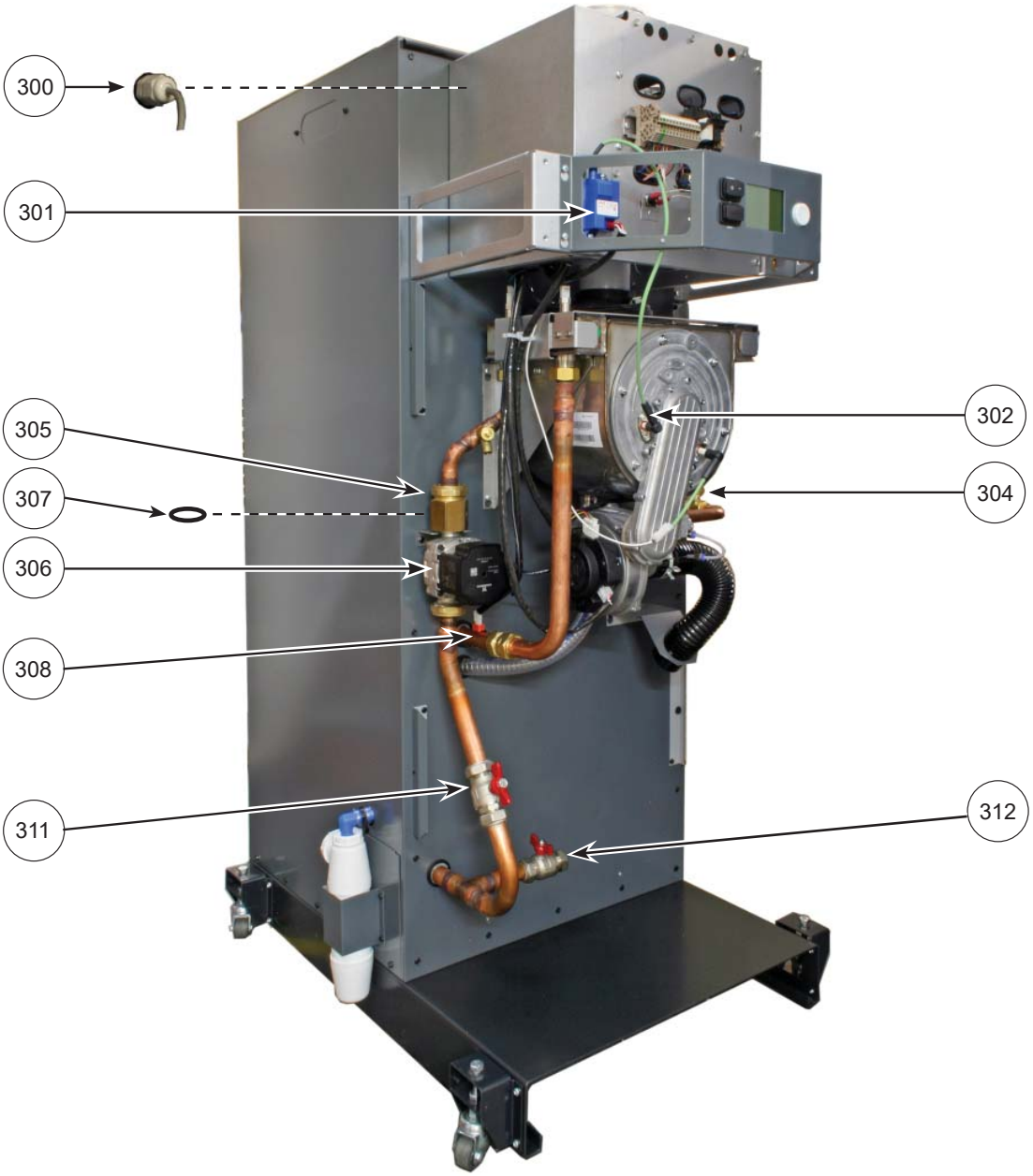

Item No.	Description	Part Number
300	CABLE GLAND	7709386
301	SPARK GENERATOR	7709314
302	LEAD FOR SPARK ELECTRODE	7709313
303	PRESS. SENSOR WATER H3	7709328
304	22MM RIGID FAN GAS COCK	7709371
305	NON-RETURN VALVE ASSY	7709287
306	PUMP FOR MAXXflo EVO	7709310
307	PUMP / NRV GASKET	7720039
308	TEMP. SENSOR CASCADE B10	7709330
309	28MM COMPRESSION TEE	7709368
310	AIR PRESSURE SWITCH (COND. LINE)	7709288
311	28MM ISOLATION VALVE	7709366
312	SPARE DRAIN VALVE 22MM	7727903

6.3 COMPONENTS ILLUSTRATIONS (CONTINUED)

DRAIN COMPONENTS

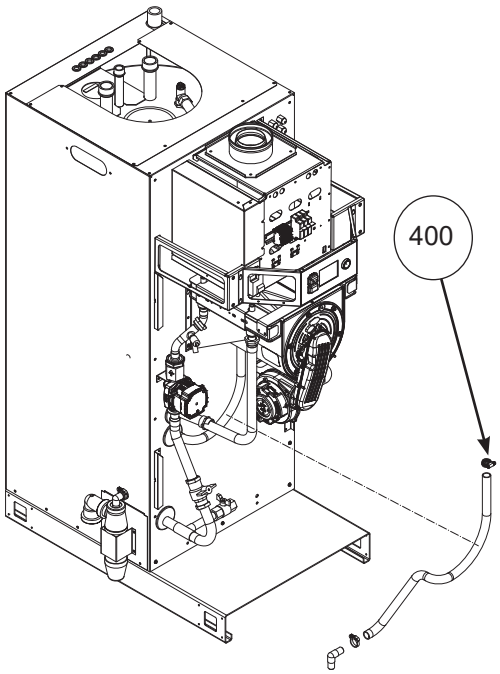

FLUE COMPONENTS

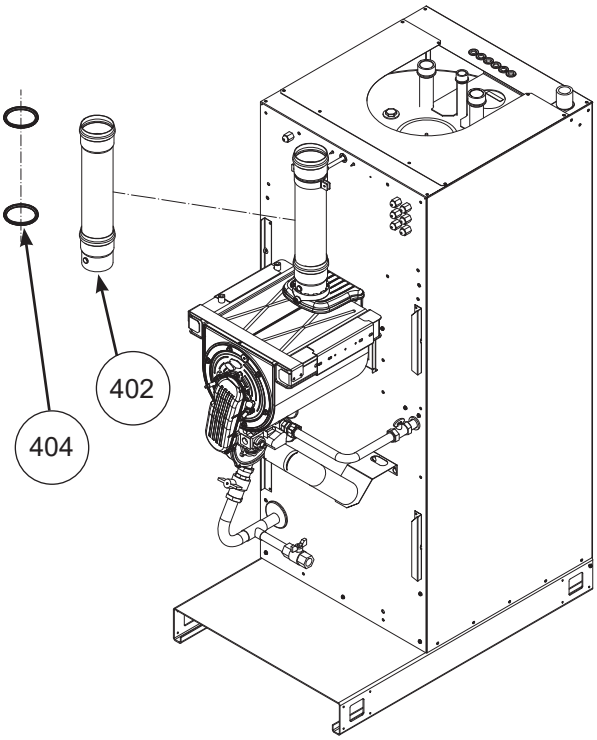

Item No.	Description	Part Number
400	CONDENSATE SYSTEM SINGLE H/E	7709358
402	FLUE SYSTEM SINGLE H/E MAXXflo EVO	7709360
404	FLUE SEAL SET SINGLE H/E MAXXflo EVO	7709362

6.3 COMPONENTS ILLUSTRATIONS (CONTINUED)

HEAT ENGINE SPARES

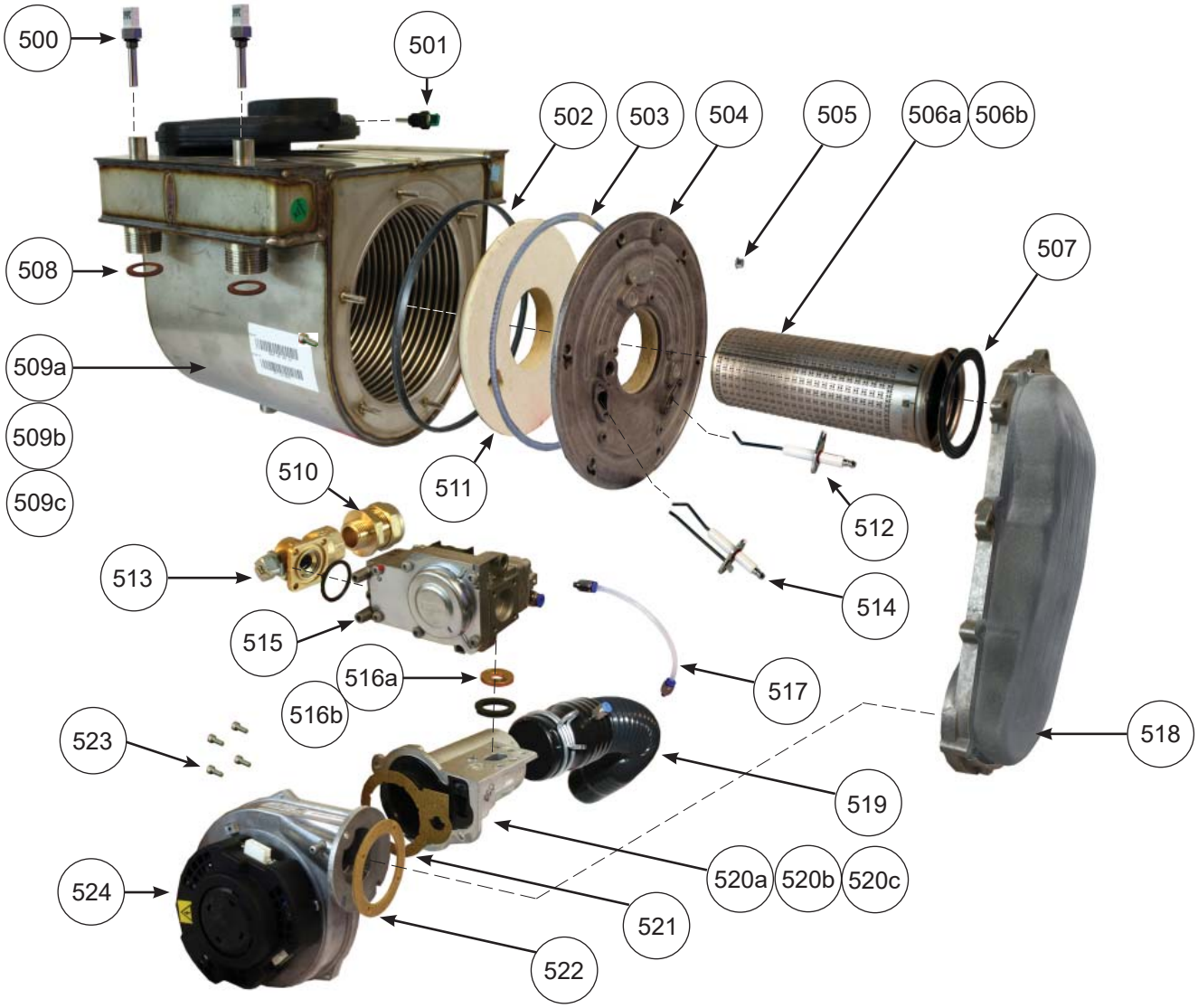

6.3 COMPONENTS ILLUSTRATIONS (CONTINUED)

HEAT ENGINE SPARES (CONTINUED)

Item No.	Description	Part Number
500	TEMP. SENSOR FLOW RETURN B2/B7	7709317
501	TEMP. SENSOR FLUE B8	7709318
502	H/E SILICONE DOOR SEAL	7709294
503	H/E ROPE DOOR SEAL	7709295
504	H/E BURNER DOOR ASSY	7720060
505	H/E NUT SET FOR BURNER DOOR	7709297
506a	BURNER FOR 30+45KW H/E	7709298
506b	BURNER FOR 60KW H/E	7709299
507	H/E AIR ARM GASKET	7709300
508	H/E CONNECTION GASKET	7720038
509a	HEAT EXCHANGER 30KW	7709291
509c	HEAT EXCHANGER 60KW	7709293
510	22X1/2” BSPM STRAIGHT CONN	7709369
511	H/E BURNER DOOR INSULATION	7709296
512	IONIS. ELECTRIC INC GASKET+SCREWS	7709311
513	1/2” GAS COCK C/W O RING	7709370
514	SPARKELECTR. INC GASKET+SCREWS	7709312
515	GAS VALVE FOR MAXXflo EVO	7709308
516a	LPG KIT FOR MAXXflo EVO 30KW & 90KW	7730595
516b	LPG KIT FOR MAXXflo EVO 60KW & 120KW	7730596
517	TUBE+CONNECTRS GAS V. AIR INLET	7709309
518	FLUE BACKFLOW PREV. DEVICE ASSY	7709315
519	AIR HOSE (INC. CLIP)	7709316
520a	VENTURI 30KW	7709305
520c	VENTURI 60KW	7709307
521	VENTURI GASKET	7709304
522	FAN GASKET	7709302
523	FASTENER SET FOR FAN-VENTURI	7709303
524	FAN FOR MAXXflo EVO	7709301

6.3 COMPONENTS ILLUSTRATIONS (CONTINUED)

WIRING CENTRE SPARES

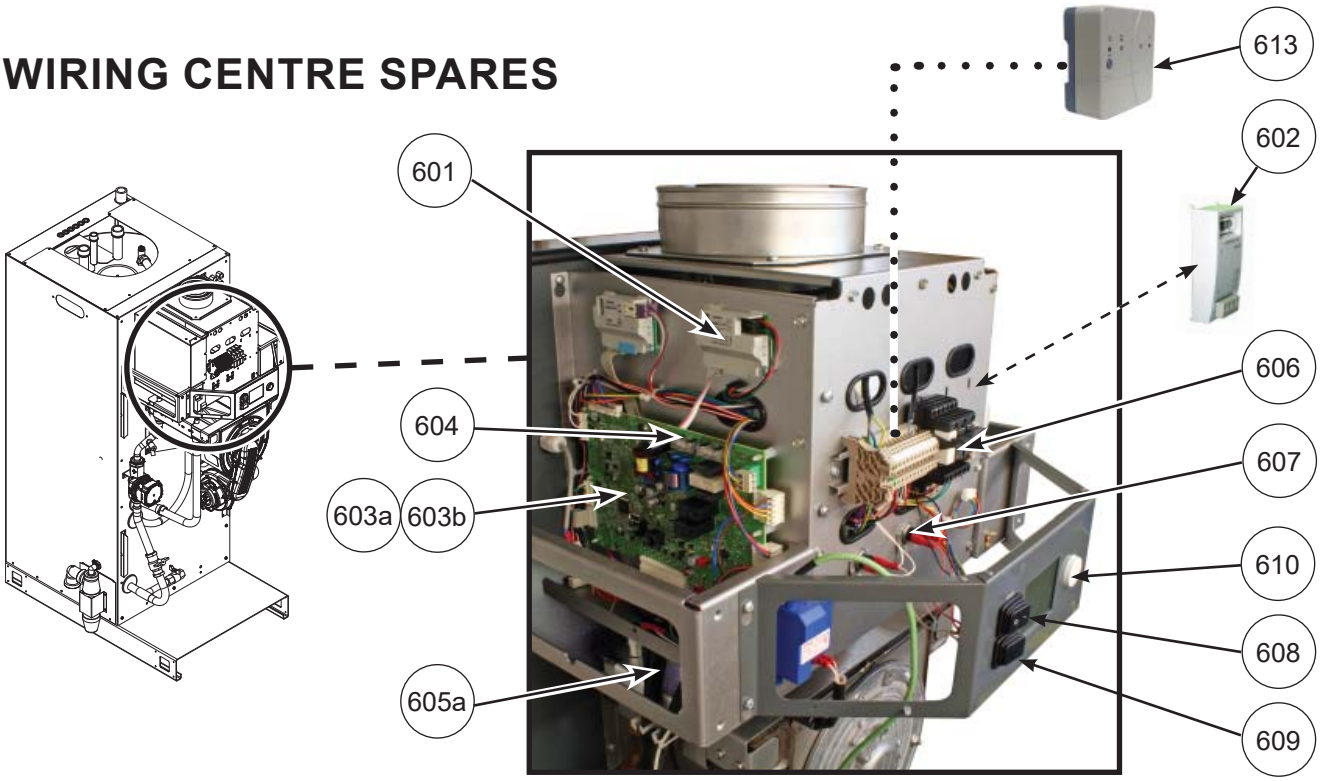

Item No.	Description	Part Number
601	MODBUS CLIP-IN MODULE KIT	7720069
602	OPTION - CLIP IN EXPANSION MODULE KIT	7720070
603a	CONTROL PCB FOR MAXXflo EVO 30	7709319
603b	CONTROL PCB FOR MAXXflo EVO 60	7709320
604	CONTROL PCB FUSES (2 PACK)	7709324
605a	WIRING LOOM 30+60 MAXXflo EVO	7727904
606	DIN RAIL TERMINAL BLOCK	7709334
607	TEMP LIMIT THERMOSTAT 90°C	7709331
608	ON/OFF SWITCH	7709332
609	RESET SWITCH	7709333
610	USER INTERFACE MAXXflo EVO	7709326
613	OPTION - WEB SERVER FOR MAXXflo EVO	7726955

6.3 COMPONENTS ILLUSTRATIONS (CONTINUED)

COPPER PIPEWORK SPARES - 201/301 MODELS

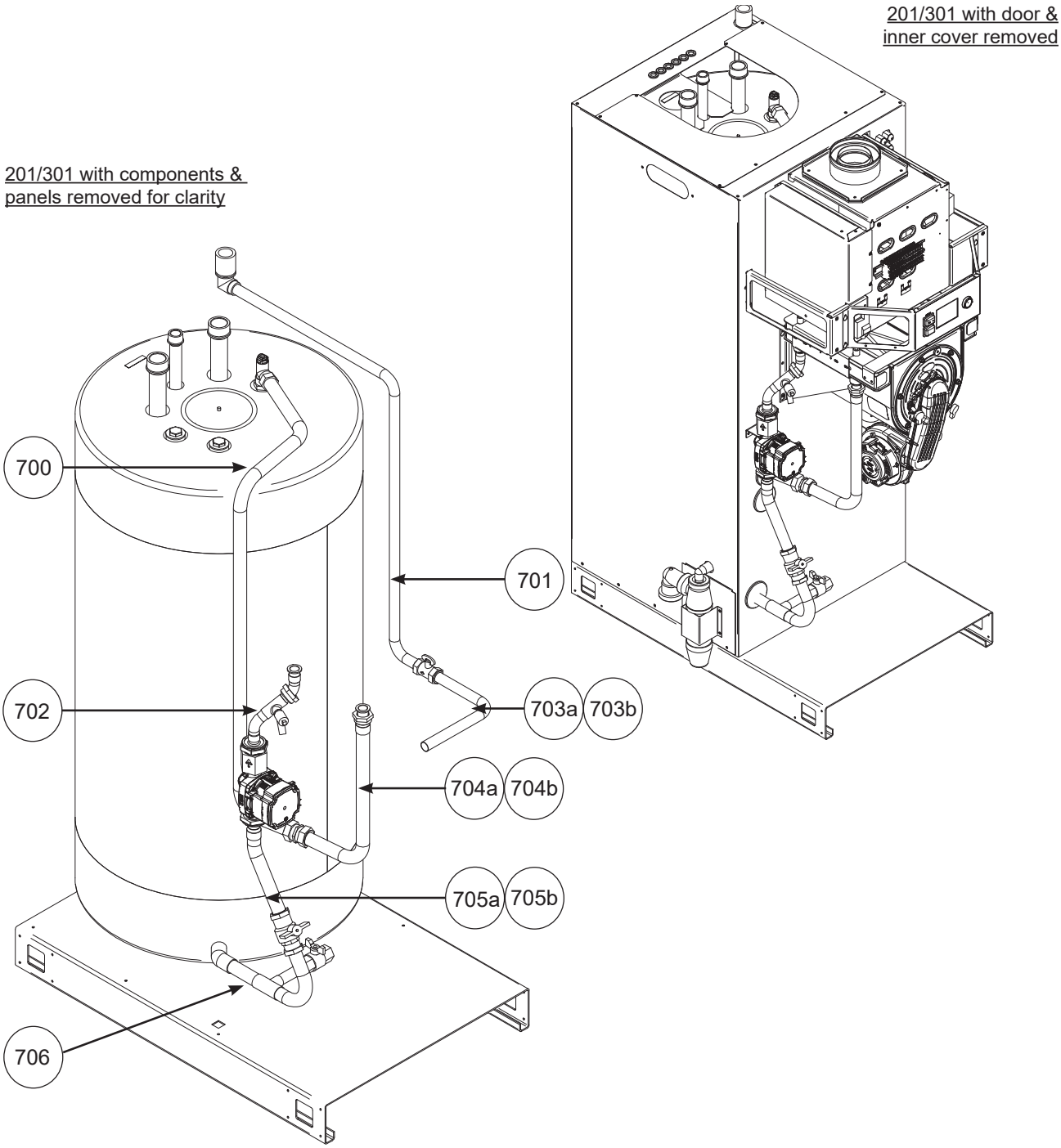

Item No.	Description	Part Number
700	PIPE TANK CONN. FLOW ASSY 28	7709351
701	PIPE SING. H/E GAS MANIFOLD 22	7709356
702	PIPE ALL UP. H/E CO. RE. AS. 22	7709342
703a	PIPE UP. 30&45KW H/E GAS 22MM	7709352
703b	PIPE UP. 60KW H/E GAS 22MM	7709353
704a	PIPE SINGLE 30KW H/E FLOW 28MM	7709346
704b	PIPE SINGLE 60KW H/E FLOW 28MM	7709347
705a	PIPE 201 H/E IV. PU. RE. AS. 28MM	7709337
705b	PIPE 301 H/E IV. PU. RE. AS. 28MM	7709338
706	PIPE SINGLE H/E RE. MA. AS. 28MM	7709335

6.4 RECOMMENDED SPARES REQUIREMENTS

Emergency parts recommended to be kept on site

The following components are recommended to ensure fast recovery times in the event of a heater component failure. An engineer attending a breakdown on site can immediately use the contents of the 1st aid kit to make a rapid repair. Once a component is used it must be replaced at the earliest possible opportunity to ensure rapid breakdown recovery abilities are retained.

Essential First Aid kit contents to maintain the heat engine in operation

- 1 x Gas valve
- 1 x Fan
- 1 x LMS14 PCB (slave default but master selectable)
- 1 x Q1 Pump
- 1 x Spark generator
- 1 x Ionisation electrode + gasket
- 1 x Spark electrode + gasket
- 1 x H3 Pressure sensor
- 1 x 10kΩ B2 flow or B7 return temperature sensor
- 1 x 10kΩ B3 upper or B31 lower tank temp sensor
- 1 x 20kΩ B8 Flue temp sensor

6.5 ERROR CODES

Error Code	Error Code Description	Diag. Code	Notes
20	Boiler temperature 1, sensor error	Other	Boiler flow sensor (B2) is outside normal limits
		439	Boiler flow sensor (B2) is short-circuit
		440	Boiler flow sensor (B2) is open-circuit
26	Common flow temperature sensor error	Any	Check connections or replace faulty sensor located on common flow pipe work up stand section (B10)
28	Flue gas temperature, sensor error	539 543	Flue gas sensor (B8) is short-circuit
		540 544	Flue gas sensor (B8) is open-circuit
40	Return temperature 1, sensor error	Other	Boiler flow sensor (B7) is outside normal limits
		441	Boiler flow sensor (B7) is short-circuit
		442	Boiler flow sensor (B7) is open-circuit
50	DHW temperature 1, sensor error	Any	Check connections or replace faulty DHW tank sensor (B3)
81	LPB short-circuit or no power supply	Any	LPB Short circuit or no bus power supply. Check operation of OCI345 modules and connecting cables
82	LPB address collision	Any	LPB address duplicated on another Control PCB - Check address of all control PCBs via parameter 6600
83	BSB short circuit	Any	No BSB communication or wires shorted - Check operation of GUI or OZW672 (if fitted)
84	BSB address collision	Any	Two appliances connected through BSB (e.g. OZW672) have the same allocation address. Change one of the appliances address via parameter 6600
98	Extension module 1, error	Any	AGU2.5 configuration error - Check parameters
99	Extension module 2, error	Any	AGU2.5 configuration error - Check parameters
100	More than one clock time master	Any	Only one device should be set as the time master, check on the GUI (parameter 6640) and any OZW672 connected (in case of connection to an OZW672, this device should be the master)
102	Clock master without power reserve	Any	The control PCB battery backup for the time clock has been depleted following the restoration of power to the heater. If this message has not cleared within 10 minutes of power being turned on, turn the power off, wait 10 seconds and turn the power on again. This message does not prevent the operation of the heater in any way.
105	Maintenance message	Any	Item requiring attention but not preventing appliance operation (e.g. 12 Month service due). Check details of message on the appliance Front GUI screen.

6.5 ERROR CODES (CONTINUED)

Error Code	Error Code Description	Diag. Code	Notes
110	SLT Lockout	306 431 432 433 434 435 436 756	Electronic temperature limits exceeded. General overheating issue. Check for pump operation, trapped air and heat exchanger blockages. Monitor temperatures of system to establish problem area.
		429 818	Criteria for the safe reset of the error sub code 433 (see above) has not been met. Allow the boiler to cool further before pressing reset again
		305 412 550 551 754	Overheat protection circuit is open circuit (X18 STB). Check connector is pushed fully onto control PCB
		428 438 817	Maximum Delta T of system exceeded. Check pump operation and presence of trapped air in the heat exchanger. Flow through heat exchanger may be restricted.
		426 437 815	Flow temperature heat up gradient exceeded. Check pump operation and presence of trapped air in the heat exchanger. Flow through heat exchanger may be restricted.
		427 816	Criteria for the safe reset of the error sub code 426 (see above) has not been met. Allow the boiler to cool further before pressing reset again
		420 421 819 820	Return temperature greater than flow temperature. Check that the flow and return sensors are operating correctly
		419 430 813 814	Flow temperature limit exceeded. Check for overheating issues and flow sensor (B2) performance.
		809 810 422 423	Flow temperature reading error. Temperature reading less than 0°C or greater than 124°C . Check flow sensor (B2) and replace if necessary.
		425 812	Return temperature limit exceeded. Check for overheating issues and return sensor (B7) performance.
		424 811	Return temperature reading error. Temperature reading less than 0°C or greater than 124°C . Check flow sensor (B7) and replace if necessary.
111	Shutdown limit thermostat	Any	Heat exchanger temperatures have been exceeded. Investigate flow rates and controls to determine causes of temporary fault code.
125	Maximum boiler temperature exceeded	Any	Flow temperatures have been exceeded. Appliance will continue once temperatures have dropped below maximum allowed limits.
126	DHW charging temperature not reached	Any	Charging temperature never achieved. Check operation and heat up times for DHW
127	DHW legionella temperature not reached	Any	Check operation of legionella function and DHW system. Legionella setpoint has not been achieved within 48 hours of the legionella function operating. If using a secondary return system and sensor, do not set the legionella function setpoint too high, as the heat losses around the hot water pipework may not permit this setpoint to be achieved
128	Loss of flame during operation	394	Flame lost in operation within the first 7 seconds of the start of the modulation phase. Check the CO^2 is set correctly and check operation and condition of ionisation electrode.
		854	Flame lost in operation after the first 7 seconds of the start of the modulation phase. Check the CO^2 is set correctly and check operation and condition of ionisation electrode.
		625	Flame lost in operation more than 24 times in a 24 hour period. Check the preceding error codes for details on when the ionisation current was lost. Check the operation of the ionisation electrode, gas supply, and flue system. Check that there is sufficient gas available to the heater at all times.

6.5 ERROR CODES (CONTINUED)

Error Code	Error Code Description	Diag. Code	Notes
130	Flue gas temperature too high	Any	Check causes of high temperatures before operating Appliance. Inspect inside of heat exchanger for dirt build up. Check CO_2 levels at min and max output.
133	Safety time exceeded	395	Records individual ignition failures and the times they have occurred. Check gas supply, spark electrode, spark generator, Ionisation probe, CO^2 setting and flue system
		625	A total of 5 unsuccessful ignition attempts has occurred within a 24 hour period. This is the point that the heater went into permenant lockout
142	Device failure (Bus)	Any	Check that the appliance and OZW672 is powered and connected correctly.
151	BMU Internal error	330 331	Ignition output error. Check operation of spark generator. Replace PCB if no fault with the spark generator found.
		332 333	Gas valve output error. Check operation of gas valve. Replace PCB if no fault with the gas valve found.
		Other	Check if polarity of live and neutral has been reversed to the appliance. Replace PCB if fault repeatedly occurs.
152	Parameterization error	Any	Incorrect / conflicting parameters input (last changed parameters need to be investigated).
153	Unit Locked	622	Temperature inside the appliance casing has exceeded 90°C. Check heat engine door seals and door nuts are correctly tightened. Pressing the reset for more than 10 seconds will also produce this lockout.
		848 849	Parameter update finished. Press reset to apply changes.
160	Fan speed threshold not reached	Any	Fan does not reach required speed setpoint via PWM control-Check wiring and operation of fan. Replace fan if necessary
		377	Fan speed not reached - Home run stage
		378	Fan speed not reached - Standby stage
		379	Fan speed not reached - Ignition stage
		380	Fan speed not reached - Pre purge stage
		381	Fan speed not reached - Post purge stage
162	Air pressure switch	Any	Air pressure switch has activated or is open circuit. Check for flue restriction or incorrect flue installation. Check air pressure switch function (operates at 365 Pa). Condense pipework may be blocked. Check the condensate pipe system is free to flow into the trap and beyond.
171	Fault input 1	Any	User defined OZW672 input D1 has been activated.
172	Fault input 2	Any	User defined OZW672 input D2 has been activated.
183	Unit in parameterisation mode	Any	Code will be displayed when a programming stick is used but should clear when programming is complete. Repeat stick operation if fault code persists
217	Sensor error	Any	Ionisation current fault or short circuit. Check operation of ionisation probe using parameter 8329 (menu - Diagnostics heat generation). Ionisation probe may need replacing. Check earthing to the heater
218	Pressure supervision	Any	Water pressure inside appliance is low but not yet critical. Appliance will continue to operate but at 80% of maximum output. Full output power will not be available until the water pressure is at or above 0.2 bar.

6.5 ERROR CODES (CONTINUED)

Error Code	Error Code Description	Diag. Code	Notes
317	Mains frequency outside permitted range	Any	Check electrical supply to appliance.
322	Water press 3 too high	Any	Water pressure inside the appliance is too high for safe operation. Operation will automatically resume once water pressure is at or below maximum levels. Check that the appliance flow is not restricted or blocked, or the water isolator valves are shut off.
323	Water press 3 too low	Any	Water pressure inside appliance is too low for safe operation. Operation will automatically resume once water pressure is at or above 0.1 bar.
324	Input BX, same sensors	Any	BX sensor duplicated - check parameters
325	Input BX/extension module, same sensors	Any	BX extension module sensor duplicated - check parameters
327	Extension module, same function	Any	AGU2.5 extension module function duplicated - check parameter setup for the AGU2.5 extension module (“Configuration” menu)
335	Sensor input BX21 without function	Any	BX21 connected but not defined - define parameters for this sensor connected to the AGU2.5 extension module
336	Sensor input BX22 without function	Any	BX22 connected but not defined - define parameters for this sensor connected to the AGU2.5 extension module
353	Cascade flow sensor B10 missing	Any	Check connections and configuration of common flow temperature sensor (B10), which is located at the feed into the tank on the front, left, mid section of the appliance
384	Extraneous light	Any	Ionisation current detected before ignition. Check ionisation current (“Diagnostics producer” parameter 8329). If there is a current present whilst the burner is in standby, turn of gas supply to check gas valve is closing completely. If current is still present, remove ionisation probe and use a screwdriver to clear the opening through the heat engine door before replacing the probe.
385	Mains under voltage	Any	Mains voltage below 185v - check electrical supply to the appliance.
386	Fan speed tolerance	Any	Fan outside allowed speed tolerance level. Check all wiring. Check for possible air or flue restriction. Replace fan if all airways are clear and wiring is good.
432	Function earth not connected	Any	No Ignition earth, X1 / X17 not connected or earth fault.
NA	Operating mode button locked - Cannot operate in DHW mode (No fault displayed)	Any	Remote system enable operating. Check to see if link wire is still in place or controls wired to these terminals are closing this circuit. When the appliance is operating via the volt free enable signal, it is not possible to operate the appliance manually via the GUI if the signal is not enabled (circuit closed).

SENSOR RESISTANCE VALUES

NTC 10K Sensors (all sensors except for flue sensor):

Temperature (°C)	Resistance (Ohms)	Temperature (°C)	Resistance (Ohms)
0	32555	55	2989
5	25339	60	2490
10	19873	65	2084
15	15699	70	1753
20	12488	75	1481
25	10000	80	1256
30	8059	85	1070
35	6535	90	915
40	5330	95	786
50	3605	100	677

NTC 20K Sensors (flue sensor only):

Temperature (°C)	Resistance (Ohms)	Temperature (°C)	Resistance (Ohms)
0	67650	90	1845
10	40491	100	1377
20	25099	110	1043
25	20000	120	801
30	16057	130	624
40	10569	140	491
50	7140	150	392
60	4938	160	315
70	3489	170	256
80	2515	180	210

Blank Page

Blank Page

M8670 Rev G : Nov 2019

RS 33961

INVESTORS IN PEOPLE | Bronze

ICOM Energy Association

INDUSTRIAL ASSOCIATE

CIBSE PATRONS

safe REGISTER

500403

Sales 0345 070 1055

Technical 0345 070 1057

Web andrewswaterheaters.co.uk

Registered office address: Baxi Heating UK, Brooks House, Coventry Road, Warwick CV34 4LL

Nov 2019

Andrews. Built to perform.

ALL TOGETHER BETTER

BAXI HEATING

BAXI HEATING COMMERCIAL BRANDS

remeha

ANDREWS WATER HEATERS

POTTERTON COMMERCIAL

PACKAGED PLANT SOLUTIONS